DEEP SEA ELECTRONICS

DSE8610 MKII Operator Manual

Document Number: 057-254

Author: Ashley Senior

Deep Sea Electronics Ltd.
Highfield House
Hunmanby
North Yorkshire
YO14 0PH
England

Sales Tel: +44 (0) 1723 890099

E-mail: sales@deepseaelectronics.com
Website: www.deepseaelectronics.com

DSE8610 MKII Operator Manual

© Deep Sea Electronics Ltd.
All rights reserved. No part of this publication may be reproduced in any material form (including photocopying or storing in any medium by electronic means or other) without the written permission of the copyright holder except in accordance with the provisions of the Copyright, Designs and Patents Act 1988.
Applications for the copyright holder's written permission to reproduce any part of this publication must be addressed to Deep Sea Electronics Ltd. at the address above.

The DSE logo and the names DSEGenset®, DSEAts®, DSEControl® and DSEPower® are UK registered trademarks of Deep Sea Electronics Ltd.

Any reference to trademarked product names used within this publication is owned by their respective companies.

Deep Sea Electronics Ltd. reserves the right to change the contents of this document without prior notice.

Amendments Since Last Publication

Amd. No.	Comments
1	Initial Release
2	Added information about electrical trip reset
3	Added DSE8660 MKII document part numbers, updated FPE, added EPA screen and J1939-75 support.
4	Added SNMP, Redundant MSC, Battery Chargers on DSENet, Additional Application Diagrams, New/Missing Display Sections and Parallel Operation Descriptions. Updated Bibliography, UL Requirements, J1939-75, DSENet Info, Protections, Breaker Operation in Manual Mode and FPE.
5	Corrected imperial distances. Updated J1939-75 Specification, Applicable Standards and DSE Four Steps to Synchronising Added Additional Droop Commissioning Screen, MSC Connect DSE8610s Screen, Droop and Load Demand Scheme Operation, DSE Steps to Successful Loadsharing.

Typeface: The typeface used in this document is *Arial*. Care must be taken not to mistake the upper-case letter I with the numeral 1. The numeral 1 has a top serif to avoid this confusion.

TABLE OF CONTENTS

Section **Page**

1 INTRODUCTION 9
1.1 CLARIFICATION OF NOTATION 10
1.2 GLOSSARY OF TERMS 10
1.3 BIBLIOGRAPHY 12
1.3.1 INSTALLATION INSTRUCTIONS 12
1.3.2 MANUALS 12
1.3.3 TRAINING GUIDES 13
1.3.4 THIRD PARTY DOCUMENTS 14
2 SPECIFICATION 15
2.1 OPERATING TEMPERATURE 15
2.1.1 SCREEN HEATER OPERATION 15
2.2 REQUIREMENTS FOR UL 15
2.3 TERMINAL SPECIFICATION 16
2.4 POWER SUPPLY REQUIREMENTS 16
2.4.1 MODULE SUPPLY INSTRUMENTATION DISPLAY 16
2.5 VOLTAGE & FREQUENCY SENSING 17
2.6 CURRENT SENSING 17
2.6.1 VA RATING OF THE CTS 18
2.6.2 CT POLARITY 19
2.6.3 CT PHASING 19
2.6.4 CT CLASS 19
2.7 INPUTS 20
2.7.1 DIGITAL INPUTS 20
2.7.2 EMERGENCY STOP 20
2.7.3 ANALOGUE INPUTS 21
2.7.3.1 ANALOGUE INPUT A 21
2.7.3.2 ANALOGUE INPUT B, C & D 22
2.7.4 CHARGE FAIL INPUT 23
2.7.5 MAGNETIC PICK-UP 23
2.8 OUTPUTS 24
2.8.1 DC OUTPUTS A & B (FUEL & START) 24
2.8.2 CONFIGURABLE VOLT-FREE RELAY OUTPUTS C & D 24
2.8.3 CONFIGURABLE DC OUTPUTS E, F, G, H, I, J, K & L 24
2.8.4 GOVERNOR CONTROL OUTPUT 24
2.8.5 AVR CONTROL OUTPUT 24
2.9 COMMUNICATION PORTS 25
2.10 COMMUNICATION PORT USAGE 26
2.10.1 USB SLAVE PORT (PC CONFIGURATION) 26
2.10.2 USB HOST PORT (DATA LOGGING) 26
2.10.3 RS232 PORT 27
2.10.3.1 RECOMMENDED EXTERNAL MODEMS 27
2.10.3.2 RECOMMENDED PC RS232 SERIAL PORT ADD-ONS 28
2.10.4 RS485 PORT 29
2.10.4.1 CABLE SPECIFICATION 29
2.10.4.2 RECOMMENDED PC RS485 SERIAL PORT ADD-ONS 30
2.10.4.3 RS485 USED FOR MODBUS ENGINE CONNECTION 31
2.10.5 ETHERNET PORT 32
2.10.5.1 MODBUS TCP 32
2.10.5.2 SNMP 33
2.10.5.3 DIRECT PC CONNECTION 34
2.10.5.4 CONNECTION TO BASIC ETHERNET 35
2.10.5.5 CONNECTION TO COMPANY ETHERNET INFRASTRUCTURE 36
2.10.5.6 CONNECTION TO THE INTERNET 37
2.10.5.7 FIREWALL CONFIGURATION FOR INTERNET ACCESS 38
2.10.6 MSC (MULTI-SET COMMUNICATIONS) LINK 39

2.10.8 CAN PORT (REDUNDANT MSC) 40
2.10.9 ECU PORT (J1939) 41
2.10.9.1 J1939-75 42
2.10.10 DSENET® (EXPANSION MODULES) 43
2.10.10.1 DSENET® USED FOR MODBUS ENGINE CONNECTION 44
2.11 SOUNDER 45
2.11.1 ADDING AN EXTERNAL SOUNDER 45
2.12 ACCUMULATED INSTRUMENTATION 45
2.13 DIMENSIONS AND MOUNTING 46
2.13.1 DIMENSIONS 46
2.13.2 PANEL CUTOUT 46
2.13.3 WEIGHT 46
2.13.4 FIXING CLIPS 47
2.13.5 CABLE TIE FIXING POINTS 48
2.13.6 SILICON SEALING GASKET 48
2.14 APPLICABLE STANDARDS 49
2.14.1 ENCLOSURE CLASSIFICATIONS 51
2.14.1.1 IP CLASSIFICATIONS 51
2.14.1.2 NEMA CLASSIFICATIONS 51

3 INSTALLATION 52
3.1 USER CONNECTIONS 52
3.2 CONNECTION DESCRIPTIONS 53
3.2.1 DC SUPPLY, E-STOP INPUT, DC OUTPUTS & CHARGE FAIL INPUT 53
3.2.2 ANALOGUE SENSOR INPUTS & CAN 54
3.2.3 MPU, ECU, MSC & DSENET® 55
3.2.4 OUTPUT C & D, & V1 (GENERATOR) VOLTAGE & FREQUENCY SENSING 56
3.2.5 V2 (BUS) VOLTAGE & FREQUENCY SENSING 56
3.2.6 CURRENT TRANSFORMERS 57
3.2.6.1 CT CONNECTIONS 58
3.2.7 DIGITAL INPUTS 58
3.2.8 RS485 59
3.2.9 RS232 60
3.2.10 USB SLAVE (PC CONFIGURATION) CONNECTOR 61
3.2.11 USB HOST (DATA LOGGING) CONNECTOR 61
3.3 TYPICAL WIRING DIAGRAM 62
3.3.1 3 PHASE 4 WIRE WITH RESTRICTED EARTH FAULT 63
3.3.2 EARTH SYSTEMS 64
3.3.2.1 NEGATIVE EARTH 64
3.3.2.2 POSITIVE EARTH 64
3.3.2.3 FLOATING EARTH 64
3.3.3 TYPICAL ARRANGEMENT OF DSENET® 65
3.3.4 TYPICAL ARRANGEMENT OF MSC LINK 66
3.4 ALTERNATE TOPOLOGY WIRING DIAGRAMS 67
3.4.1 SINGLE PHASE (L1 & N) 2 WIRE WITH RESTRICTED EARTH FAULT 67
3.4.2 SINGLE PHASE (L1 & N) 2 WIRE WITHOUT EARTH FAULT 68
3.4.3 SINGLE PHASE (L1 & L2) 3 WIRE WITH RESTRICTED EARTH FAULT 69
3.4.4 SINGLE PHASE (L1 & L2) 3 WIRE WITHOUT EARTH FAULT 70
3.4.5 SINGLE PHASE (L1 & L3) 3 WIRE WITH RESTRICTED EARTH FAULT 71
3.4.6 SINGLE PHASE (L1 & L3) 3 WIRE WITHOUT EARTH FAULT 72
3.4.7 2 PHASE (L1 & L2) 3 WIRE WITH RESTRICTED EARTH FAULT 73
3.4.8 2 PHASE (L1 & L2) 3 WIRE WITHOUT EARTH FAULT 74
3.4.9 2 PHASE (L1 & L3) 3 WIRE WITH RESTRICTED EARTH FAULT 75
3.4.10 2 PHASE (L1 & L3) 3 WIRE WITHOUT EARTH FAULT 76
3.4.11 3 PHASE 3 WIRE DETLA WITHOUT EARTH FAULT 77
3.4.12 3 PHASE 4 WIRE WITHOUT EARTH FAULT 78
3.4.13 3 PHASE 4 WIRE WITH RESTRICTED EARTH FAULT 79
3.4.14 3 PHASE 4 WIRE WITH UNRESTRICTED EARTH FAULT 80
3.5 TYPICAL SINGLE LINE APPLICATION DRAWINGS 81
3.5.1 MULTI GENERATORS FOR PRIME POWER 81

3.5.2 MULTI GENERATORS FOR PRIME POWER USING LOAD-SHARE LINES 82
3.5.3 MULTI GENERATORS FOR PRIME POWER WITH BUS COUPLERS 83
3.5.4 MULTI GENERATORS WITH SINGLE SYNCHRONISING MAINS SWITCH 84
3.5.5 MULTI GENERATORS WITH SINGLE SYNCHRONISING TRANSFER SWITCH 85
3.5.6 MULTI GENERATORS WITH TWO SYNCHRONISING TRANSFER SWITCHES 86
3.5.7 MULTI GENERATORS & SYNCHRONISING TRANSFER SWITCHES 87
3.5.8 MULTI GENERATORS & TRANSFER SWITCHES WITH BUS COUPLER 88
3.5.9 SINGLE GENERATOR EXPORTING (BASE LOADING) POWER 89
3.5.10 MULTI GENERATORS EXPORTING (BASE LOADING) POWER 90

4 DESCRIPTION OF CONTROLS 91
4.1 CONTROL PUSH BUTTONS 93
4.2 VIEWING THE INSTRUMENT PAGES 95
4.2.1 STATUS 96
4.2.1.1 GENERATOR LOCKED OUT 96
4.2.1.2 WAITING FOR GENERATOR 96
4.2.1.3 CONFIGURABLE STATUS SCREENS 97
4.2.2 ENGINE 98
4.2.2.1 MANUAL FUEL PUMP CONTROL 99
4.2.2.2 DPF REGENERATION LAMPS 100
4.2.3 GENERATOR 101
4.2.3.1 COMMISIONING SCREENS 102
4.2.3.2 SYNCHROSCOPE 103
4.2.3.3 MSC CONNECTED 8610 104
4.2.4 BUS 105
4.2.5 EXPANSION 105
4.2.6 CHARGER ID 106
4.2.7 ALARMS 107
4.2.7.1 ECU ALARMS (CAN FAULT CODES / DTC) 108
4.2.8 EVENT LOG 109
4.2.8.1 PROTECTIONS DISABLED 110
4.2.8.2 RESET ELECTRICAL TRIP 110
4.2.9 COMMUNICATIONS 111
4.2.9.1 RS232 SERIAL PORT 111
4.2.9.2 RS485 SERIAL PORT 115
4.2.9.3 USB CONNECTION 116
4.2.9.4 ETHERNET 117
4.2.9.5 DSENET CONNECTION 118
4.2.9.6 MSC CONNECTION 118
4.2.10 SCHEDULE 119
4.2.11 EDITOR 119
4.2.12 PLC INSTRUNMENTS 120
4.2.13 CONFIGURABLE CAN 121
4.2.14 MISCELLANEOUS 122
4.2.14.1 DATA LOGGING 122
4.2.15 ABOUT 123
4.3 USER CONFIGURABLE INDICATORS 124

5 OPERATION 125
5.1 QUICKSTART GUIDE 125
5.1.1 STARTING THE ENGINE 125
5.1.2 STOPPING THE ENGINE 126
5.2 STOP/RESET MODE 127
5.2.1 ECU OVERRIDE 127
5.3 MANUAL MODE 128
5.3.1 STARTING SEQUENCE 128
5.3.2 ENGINE RUNNING 129
5.3.3 STOPPING SEQUENCE 129
5.4 AUTOMATIC MODE 130
5.4.1 WAITING IN AUTO MODE 130
5.4.2 STARTING SEQUENCE 130

5.4.3 ENGINE RUNNING 131
5.4.4 STOPPING SEQUENCE 131
5.5 PRIME POWER (LOAD SHARE) 132
5.5.1 ISOCHRONOUS 132
5.5.2 DROOP 133
5.5.3 LOAD DEMAND SCHEME 135
5.6 FIXED EXPORT (BASE LOAD) 136
5.6.1 POWER MODES 137
5.6.1.1 FREQUENCY AND ACTIVE (KW) POWER MODES 137
5.6.1.2 VOLTAGE AND REACTIVE (KVAR) POWER CONTROL 138
5.7 SCHEDULER 139
5.7.1 STOP MODE 139
5.7.2 MANUAL MODE 139
5.7.3 AUTO MODE 139
5.8 MSC COMPATIBILITY MODE 140
5.9 ALTERNATIVE CONFIGURATIONS 141
5.10 DUMMY LOAD / LOAD SHEDDING CONTROL 141
5.10.1 DUMMY LOAD CONTROL 141
5.10.2 LOAD SHEDDING CONTROL 142
5.11 SMS CONTROL 143
5.12 DEAD BUS SYNCHRONISING (AUTO MODE) 144
5.12.1 BENEFIT OF SYSTEM 144
5.12.2 HARDWARE REQUIREMENTS 144
5.12.3 OPERATION 145

6 PROTECTIONS 146
6.1 ALARMS 146
6.1.1 PROTECTIONS DISABLED 147
6.1.2 RESET ELECTRICAL TRIP 148
6.1.3 ECU ALARMS (CAN FAULT CODES / DTC) 149
6.2 INDICATIONS 150
6.3 WARNING ALARMS 151
6.4 ELECTRICAL TRIP ALARMS 158
6.5 SHUTDOWN ALARMS 164
6.6 MAINTENANCE ALARMS 170
6.7 MAINS DECOUPLING ALARMS 171
6.8 OVER CURRENT ALARM 172
6.8.1 IMMEDIATE WARNING 172
6.8.2 INVERSE DEFINITE MINIMUM TIME (IDMT) ALARM 173
6.8.2.1 CREATING A SPREADSHEET FOR THE OVER CURRENT IDMT CURVE 174
6.9 SHORT CIRCUIT IDMT ALARM 176
6.9.1 CREATING A SPREADSHEET FOR THE SHORT CIRCUIT IDMT CURVE 177
6.10 EARTH FAULT IDMT ALARM 179
6.10.1 CREATING A SPREADSHEET FOR THE EARTH FAULT IDMT CURVE 180
6.11 DEFAULT CURRENT PROTECTION TRIPPING CHARACTERISTICS 182

7 FRONT PANEL CONFIGURATION 184
7.1 MAIN CONFIGURATION EDTIOR 185
7.1.1 ACESSING THE MAIN CONFIGURATION EDTIOR 185
7.1.2 ENTERING PIN 185
7.1.3 EDITING A PARAMETER 186
7.1.4 EXITING THE MAIN CONFIGURATION EDITOR 186
7.1.5 MAIN CONFIGURATION EDITOR PARAMETERS 187
7.2 'RUNNING' CONFIGURATION EDITOR 190
7.2.1 ACCESSING THE 'RUNNING' CONFIGURATION EDITOR 190
7.2.2 ENTERING PIN 190
7.2.3 EDITING A PARAMETER 190
7.2.4 EXITING THE 'RUNNING' CONFIGURATION EDITOR 191
7.2.5 'RUNNING' CONFIGURATION EDITOR PARAMETERS 191

8 COMMISIONING 192

8.1 BASIC CHECKS 192
8.2 DSE 4 STEPS TO SUCCESSFUL SYNCHRONISING 193
8.2.1 CONTROL 193
8.2.1.1 DETERMINING CONNECTIONS AND SETTINGS FOR GOVERNORS 194
8.2.1.2 DETERMINING CONNECTIONS AND SETTINGS FOR AVRS 196
8.2.2 METERING 198
8.2.2.1 CTS ON THE RIGHT PHASE 198
8.2.2.2 CTS IN THE RIGHT DIRECTION 199
8.2.3 COMMUNICATIONS 200
8.2.4 SYNC CHECKS 201
8.2.4.1 INCORRECTLY WIRED BREAKER 202
8.2.4.2 CORRECTLY WIRED BREAKER 203
8.3 DSE STEPS TO SUCCESSFUL LOADSHARING 204
8.3.1 EXPECTED OPERATION 204
8.3.1.1 ISOCHRONOUS LOADSHARING 204
8.3.1.2 DROOP LOADSHARING 205
8.3.2 ADJUSTING GAIN (P), STABILITY (I) AND DERIVATIVE (D) 206
8.3.2.1 INITIAL SETUP 206
8.3.2.2 CALIBRATION 206
8.3.2.3 TROUBLESHOOTING 207

9 FAULT FINDING 208
9.1 STARTING 208
9.2 LOADING 208
9.3 ALARMS 209
9.4 COMMUNICATIONS 209
9.5 INSTRUMENTS 209
9.6 SYNCHRONISING & LOAD SHARING 210
9.7 MISCELLANEOUS 210

10 CAN INTERFACE SPECIFICATION (J1939-75) 211
10.1 BROADCAST MESSAGES J1939-75 211
10.1.1 ACS - AC SWITCHING DEVICE STATUS 212
10.1.2 GC1 - GENERATOR CONTROL 1 212
10.1.3 GAAC - GENERATOR AVERAGE BASIC AC QUANTITIES 213
10.1.4 GPAAC - GENERATOR PHASE A BASIC AC QUANTITIES 213
10.1.5 GPAACP - GENERATOR PHASE A AC POWER 213
10.1.6 GPAACR - GENERATOR PHASE A AC REACTIVE POWER 214
10.1.7 GPBAC - GENERATOR PHASE B BASIC AC QUANTITIES 214
10.1.8 GPBACP - GENERATOR PHASE B AC POWER 214
10.1.9 GPBACR - GENERATOR PHASE B AC REACTIVE POWER 215
10.1.10 GPCAC - GENERATOR PHASE C BASIC AC QUANTITIES 215
10.1.11 GPCACP - GENERATOR PHASE C AC POWER 215
10.1.12 GPCACR - GENERATOR PHASE C AC REACTIVE POWER 216
10.1.13 GTACPP - GENERATOR TOTAL AC PERCENT POWER 216
10.1.14 GTACE - GENERATOR TOTAL KW HOURS EXPORT 216
10.1.15 GTACER - GENERATOR TOTAL AC REACTIVE ENERGY 216
10.1.16 GTACP - GENERATOR TOTAL AC POWER 217
10.1.17 GTACR - GENERATOR TOTAL AC REACTIVE POWER 217
10.2 BROADCAST MESSAGES ENGINE INSTRUMENTATION 217
10.2.1 DD - DASH DISPLAY 217
10.2.2 EC2 - ENGINE CONFIGURATION 2 218
10.2.3 EEC1- ENGINE SPEED 218
10.2.4 EEC4 - CRANK ATTEMPT COUNT ON PRESENT START ATTEMPT 218
10.2.5 EFL_P1 - OIL PRESSURE 218
10.2.6 EOI - EMERGENCY STOP 219
10.2.7 ET1 - COOLANT TEMPERATURE 219
10.2.8 HOURS - ENGINE HOURS REVOLUTIONS 219
10.2.9 VEP1 - VEHICLE ELECTRICAL POWER 219
10.2.10 DM01 - CONDITIONS ACTIVE DIAGNOSTIC TROUBLE CODES 220

11 MAINTENANCE, SPARES, REPAIR AND SERVICING 222
11.1 PURCHASING ADDITIONAL CONNECTOR PLUGS FROM DSE 222
11.1.1 PACK OF PLUGS 222
11.1.2 INDIVIDUAL PLUGS 222
11.2 PURCHASING ADDITIONAL FIXING CLIPS FROM DSE 223
11.3 PURCHASING ADDITIONAL SEALING GASKET FROM DSE 223
11.4 PURCHASING REAR MOUNT PANEL BRACKET FROM DSE 223
11.5 DSENET® EXPANSION MODULES 224
12 WARRANTY 225
13 DISPOSAL 225
13.1 WEEE (WASTE ELECTRICAL AND ELECTRONIC EQUIPMENT) 225

1 INTRODUCTION

This document details the installation and operation requirements of the DSE8610 MKII module and is part of the DSEGenset® range of products.

The manual forms part of the product and should be kept for the entire life of the product. If the product is passed or supplied to another party, ensure that this document is passed to them for reference purposes.
This is not a *controlled document.* DSE do not automatically inform on updates. Any future updates of this document are included on the DSE website at www.deepseaelectronics.com

The DSE86xx MKII series is designed to provide differing levels of functionality across a common platform. This allows the generator OEM greater flexibility in the choice of controller to use for a specific application.

The DSE8610 MKII module has been designed to allow the operator to start, stop and synchronise the generator, and if required, transfer the load to the generator either manually or automatically.

Synchronising and Load Sharing features are included within the controller, along with the necessary protections for such a system.

The user also has the facility to view the system operating parameters via the text LCD display.

The DSE8610 MKII module monitors the engine, indicating the operational status and fault conditions, automatically shutting down the engine and giving a true first up fault condition of an engine failure by the text LCD display.

The powerful ARM microprocessor contained within the module allows for incorporation of a range of complex features:

- *Text based LCD display*
- *True RMS Voltage*
- *Current and Power monitoring*
- *USB, RS232, RS485 and Ethernet Communications*
- *Engine parameter monitoring.*
- *Fully configurable inputs for use as alarms or a range of different functions.*
- *Engine ECU interface to* ***electronic engines including Tier 4 engines****.*
- *Synchronising and load sharing with load demand start/stop*
- *Integral PLC to help provide customisation where required*
- *Fuel tank level monitoring to track fuel filling operations and detect fuel leak/theft*
- *Data Logging*
- *Direct connection to governor / AVR for synchronising and load sharing*
- *R.O.C.O.F. and vector shift protection for detection of mains failure when in parallel with the mains.*

The DSE Configuration Suite PC Software allows alteration of selected operational sequences, timers, alarms and operational sequences. Additionally, the module's integral front panel configuration editor allows adjustment of this information.

Access to critical operational sequences and timers for use by qualified engineers, can be protected by a security code. Module access can also be protected by PIN code. Selected parameters can be changed from the module's front panel.

The module is housed in a robust plastic case suitable for panel mounting. Connections to the module are via locking plug and sockets.

1.1 CLARIFICATION OF NOTATION

Clarification of notation used within this publication.

NOTE:	**Highlights an essential element of a procedure to ensure correctness.**
CAUTION!	**Indicates a procedure or practice, which, if not strictly observed, could result in damage or destruction of equipment.**
WARNING!	**Indicates a procedure or practice, which could result in injury to personnel or loss of life if not followed correctly.**

1.2 GLOSSARY OF TERMS

Term	Description
DSE8000 MKII, DSE8xxx MKII	All modules in the DSE8xxx MKII range.
DSE8600 MKII, DSE86xx MKII	All modules in the DSE86xx MKII range.
DSE8610 MKII	DSE8610 MKII module/controller
DSE8x10	DSE8610, DSE8610 MKII, DSE8710 and DSE8810 module/controller
DSE8x60	DSE8660, DSE8660 MKII, DSE8760 and DSE8860 module/controller
DSE8x80	DSE8680 module/controller
CAN	Controller Area Network Vehicle standard to allow digital devices to communicate to one another.
CDMA	Code Division Multiple Access. Cell phone access used in small number of areas including parts of the USA and Australia.
CT	Current Transformer An electrical device that takes a large AC current and scales it down by a fixed ratio to a smaller current.
BMS	Building Management System A digital/computer-based control system for a building's infrastructure.
DEF	Diesel Exhaust Fluid (AdBlue) A liquid used as a consumable in the SCR process to lower nitric oxide and nitrogen dioxide concentration in engine exhaust emissions.
DM1	Diagnostic Message 1 A DTC that is currently active on the engine ECU.
DM2	Diagnostic Message 2 A DTC that was previously active on the engine ECU and has been stored in the ECU's internal memory.
DPF	Diesel Particulate Filter A filter fitted to the exhaust of an engine to remove diesel particulate matter or soot from the exhaust gas.
DPTC	Diesel Particulate Temperature Controlled Filter A filter fitted to the exhaust of an engine to remove diesel particulate matter or soot from the exhaust gas which is temperature controlled.
DTC	Diagnostic Trouble Code The name for the entire fault code sent by an engine ECU.
ECU/ECM	Engine Control Unit/Management An electronic device that monitors engine parameters and regulates the fuelling.
FMI	Failure Mode Indicator A part of DTC that indicates the type of failure, e.g. high, low, open circuit etc.

Continued over page…

Term	Description
GSM	Global System for Mobile communications. Cell phone technology used in most of the World.
HEST	High Exhaust System Temperature Initiates when DPF filter is full in conjunction with an extra fuel injector in the exhaust system to burn off accumulated diesel particulate matter or soot.
HMI	Human Machine Interface A device that provides a control and visualisation interface between a human and a process or machine.
IDMT	Inverse Definite Minimum Time
MSC	Multi-Set Communication
OC	Occurrence Count A part of DTC that indicates the number of times that failure has occurred.
PGN	Parameter Group Number A CAN address for a set of parameters that relate to the same topic and share the same transmission rate.
PLC	Programmable Logic Controller A programmable digital device used to create logic for a specific purpose.
SCADA	Supervisory Control And Data Acquisition A system that operates with coded signals over communication channels to provide control and monitoring of remote equipment
SCR	Selective Catalytic Reduction A process that uses DEF with the aid of a catalyst to convert nitric oxide and nitrogen dioxide into nitrogen and water to reduce engine exhaust emission.
SIM	Subscriber Identity Module. The small card supplied by the GSM/CDMA provider that is inserted into the cell phone, GSM modem or DSEGateway device to give GSM/GPRS connection.
SMS	Short Message Service The text messaging service of mobile/cell phones.
SNMP	Simple Network Management Protocol An international standard protocol for managing devices on IP networks.
SPN	Suspect Parameter Number A part of DTC that indicates what the failure is, e.g. oil pressure, coolant temperature, turbo pressure etc.

1.3 BIBLIOGRAPHY

This document refers to, and is referred by the following DSE publications which are obtained from the DSE website: www.deepseaelectronics.com or by contacting DSE technical support: support@deepseaelectronics.com.

1.3.1 INSTALLATION INSTRUCTIONS

Installation instructions are supplied with the product in the box and are intended as a 'quick start' guide only.

DSE Part	Description
053-004	DSE123 Installation Instructions
053-032	DSE2548 LED Expansion Annunciator Installation Instructions
053-033	DSE2130 Input Expansion Installation Instructions
053-034	DSE2157 Output Expansion Installation Instructions
053-049	DSE9xxx Battery Charger Installation Instructions
053-082	DSE8680 Installation Instructions
053-125	DSE2131 Ratio-metric Input Expansion Installation Instructions
053-126	DSE2133 RTD/Thermocouple Input Expansion Installation Instructions
053-134	DSE2152 Ratio-metric Output Expansion Installation Instructions
053-147	DSE9460 & DSE9461 Battery Charger Installation Instructions
053-152	DSE123 Cummins PCC Variant Installation Instructions
053-182	DSE8610 MKII Installation Instructions
053-184	DSE8660 MKII Installation Instructions
053-185	DSE9473 & DSE9483 Battery Charger Installation Instructions

1.3.2 MANUALS

Product manuals are obtained from the DSE website: www.deepseaelectronics.com or by contacting DSE technical support: support@deepseaelectronics.com.

DSE Part	Description
N/A	DSEGencomm (MODBUS protocol for DSE controllers)
057-003	DSE123 Operator Manual
057-004	Electronic Engines and DSE Wiring Guide
057-045	Guide to Synchronising and Load Sharing Part 1 (Usage of DSE Load Share Controllers in synchronisation / load sharing systems.)
057-046	Guide to Synchronising and Load Sharing Part 2 (Governor & AVR Interfacing)
057-047	Load Share System Design and Commissioning Guide
057-082	DSE2130 Input Expansion Operator Manual
057-083	DSE2157 Output Expansion Operator Manual
057-084	DSE2548 Annunciator Expansion Operator Manual
057-085	DSE9xxx Battery Charger Operator Manual
057-130	DSE8680 Operator Manual
057-131	DSE8680 Configuration Suite PC Software Manual
057-139	DSE2131 Ratio-metric Input Expansion Manual
057-140	DSE2133 RTD/Thermocouple Expansion Manual
057-141	DSE2152 Ratio-metric Output Expansion Manual
057-151	DSE Configuration Suite PC Software Installation & Operation Manual
057-175	PLC Programming Guide For DSE Controllers
057-176	DSE9460 & DSE9461 Battery Charger Operator Manual
057-220	Options for Communications with DSE Controllers
057-238	DSE8610 MKII Configuration Suite PC Software Manual
057-257	DSE8660 MKII Configuration Suite PC Software Manual
057-259	DSE8660 MKII Operator Manual

1.3.3 TRAINING GUIDES

Training guides are provided as ‘hand-out’ sheets on specific subjects during training sessions and contain specific information regarding to that subject.

DSE Part	Description
056-001	Four Steps To Synchronising
056-005	Using CTs With DSE Products
056-006	Introduction to Comms
056-010	Over Current Protection
056-011	MSC Link
056-013	Load Demand Scheme
056-018	Negative Phase Sequence
056-019	Earth Fault Protection
056-020	Loss Of Excitation
056-021	Mains Decoupling
056-022	Switchgear Control
056-023	Adding New CAN Files
056-024	GSM Modem
056-026	kVA, kW, kvar and Power Factor
056-029	Smoke Limiting
056-030	Module PIN Codes
056-033	Synchronising Requirements
056-036	DSE Module Expansion
056-043	Sync Process
056-045	PLC as Load Demand Controller
056-047	Out of Sync and Failed To Close
056-051	Sending DSEGencomm Control Keys
056-053	Recommended Modems
056-054	DSE8x10 In Fixed Export
056-055	Alternate Configurations
056-057	SW1 & SW2
056-069	Firmware Update
056-071	DSE8610 Auto Test Manual
056-072	Dead Bus Synchronising
056-075	Adding Language Files
056-076	Reading DSEGencomm Alarms
056-079	Reading DSEGencomm Status
056-080	MODBUS
056-081	Screen Heaters
056-082	Override Gencomm PLC Example
056-084	Synchronising & Loadsharing
056-086	G59
056-089	DSE86xx MKI to DSE86xx MKII Conversion
056-091	Equipotential Earth Bonding
056-092	Best Practices for Wiring Restive Sensors
056-094	MSC Compatibility
056-095	Remote Start Input Functions
056-097	USB Earth Loops and Isolation
056-098	DSE73xx MKII, DSE74xx MKII, DSE86xx MKII Application Guide for John Deere Tier 4 Final Engines
056-099	Digital Output to Digital Input Connection

1.3.4 THIRD PARTY DOCUMENTS

The following third-party documents are also referred to:

Reference	Description
ISBN 1-55937-879-4	IEEE Std C37.2-1996 IEEE Standard Electrical Power System Device Function Numbers and Contact Designations. Institute of Electrical and Electronics Engineers Inc
ISBN 0-7506-1147-2	Diesel generator handbook. L.L.J. Mahon
ISBN 0-9625949-3-8	On-Site Power Generation. EGSA Education Committee.

2 SPECIFICATION

2.1 OPERATING TEMPERATURE

Module	Specification
DSE86xx MKII	-30 ºC +70 ºC (-22 ºF +158 ºF)
Display Heater Variant	-40 ºC +70 ºC (-40 ºF +158 ºF)

2.1.1 SCREEN HEATER OPERATION

Screen Heater Function	Specification
Turn On When Temperature Falls Below	-10 ºC (+14 ºF)
Turn Off When Temperature Rises Above	-5 ºC (+23 ºF)

2.2 REQUIREMENTS FOR UL

WARNING!: More than one live circuit exists, refer to section entitled *Typical Wiring Diagram* elsewhere in this document

Specification	Description
Screw Terminal Tightening Torque	4.5 lb-in (0.5 Nm)
Conductors	Terminals suitable for connection of conductor size 13 AWG to 20 AWG (0.5 mm² to 2.5 mm²). Conductor protection must be provided in accordance with NFPA 70, Article 240 Low voltage circuits (35 V or less) must be supplied from the engine starting battery or an isolated secondary circuit. The communication, sensor, and/or battery derived circuit conductors shall be separated and secured to maintain at least ¼" (6 mm) separation from the generator and mains connected circuit conductors unless all conductors are rated 600 V or greater.
Current Inputs	Must be connected through UL Listed or Recognized isolating current transformers with the secondary rating of 5 A max.
Communication Circuits	Must be connected to communication circuits of UL Listed equipment
DC Output Pilot Duty	0.5 A
Mounting	Suitable for flat surface mounting in Type 1 Enclosure Type rating with surrounding air temperature -22 ºF to +122 ºF (-30 ºC to +50 ºC) Suitable for pollution degree 3 environments when voltage sensing inputs do not exceed 300 V. When used to monitor voltages over 300 V device to be installed in an unventilated or filtered ventilation enclosure to maintain a pollution degree 2 environment.
Operating Temperature	-22 ºF to +122 ºF (-30 ºC to +50 ºC)

2.3 TERMINAL SPECIFICATION

Description	Specification	
Connection Type	Two-part connector. Male part fitted to module Female part supplied in module packing case - Screw terminal, rising clamp, no internal spring.	 Example showing cable entry and screw terminals of a 10-way connector
Minimum Cable Size	0.5 mm² (AWG 20)	
Maximum Cable Size	2.5 mm² (AWG 13)	
Tightening Torque	0.5 Nm (4.5 lb-in)	
Wire Strip Length	7 mm (9/32”)	

2.4 POWER SUPPLY REQUIREMENTS

Description	Specification
Minimum Supply Voltage	5 V continuous
Cranking Dropouts	Able to survive 0 V for 100 ms providing the supply was at least was greater than 5 V for 2 seconds before the dropout and recovers to 5 V afterwards.
Maximum Supply Voltage	35 V continuous (60 V protection)
Reverse Polarity Protection	-35 V continuous
Maximum Operating Current	530 mA at 12 V 280 mA at 24 V
Maximum Standby Current	320 mA at 12 V 120 mA at 24 V
Maximum Current When In Sleep Mode	140 mA at 12 V 75 mA at 24 V
Typical Power (Controller On, Heater Off)	3.8 W to 4.1 W
Typical Power (Controller On, Heater On)	6.8 W to 7.1 W

2.4.1 MODULE SUPPLY INSTRUMENTATION DISPLAY

Description	Specification
Range	0 V to 70 V DC (Maximum continuous operating voltage of 35 V DC)
Resolution	0.1 V
Accuracy	1 % full scale (±0.35 V)

2.5 VOLTAGE & FREQUENCY SENSING

Description	Specification
Measurement Type	True RMS conversion
Sample Rate	40 kHz
Harmonics	Up to 21st or better
Input Impedance	300 kΩ phase to neutral
Phase To Neutral	15 V (minimum required for sensing frequency) to 415 V AC (absolute maximum) Suitable for 345 V AC nominal (±20 % for under/overvoltage detection)
Phase To Phase	25 V (minimum required for sensing frequency) to 720 V AC (absolute maximum) Suitable for 600 V AC nominal (±20 % for under/overvoltage detection)
Common Mode Offset From Earth	100 V AC (max)
Resolution	1 V AC phase to neutral 2 V AC phase to phase
Accuracy	±1 % of full-scale phase to neutral ±1 % of full-scale phase to phase
Minimum Frequency	3.5 Hz
Maximum Frequency	75.0 Hz
Frequency Resolution	0.1 Hz
Frequency Accuracy	±0.05 Hz

2.6 CURRENT SENSING

Description	Specification
Measurement Type	True RMS conversion
Sample Rate	40 kHz
Harmonics	Up to 21st or better
Nominal CT Secondary Rating	1 A and 5 A
Maximum Continuous Current	5 A
Overload Measurement	15 A
Absolute Maximum Overload	50 A for 1 second
Burden	0.5 VA (0.02 Ω current shunts)
Common Mode Offset	70 V peak plant ground to CT common terminal under fault condition
Resolution	25 mA
Accuracy	±1 % of Nominal (excluding CT error)

2.6.1 VA RATING OF THE CTS

NOTE: Details for 4 mm² cables are shown for reference only. The connectors on the DSE modules are only suitable for cables up to 2.5 mm².

The VA burden of the module on the CTs is 0.5 VA. However, depending upon the type and length of cabling between the CTs and the module, CTs with a greater VA rating than the module are required.

The distance between the CTs and the measuring module should be estimated and cross-referenced against the chart opposite to find the VA burden of the cable itself.

If the CTs are fitted within the alternator top box, the star point (common) of the CTs should be connected to system ground (earth) as close as possible to the CTs. This minimises the length of cable used to connect the CTs to the DSE module.

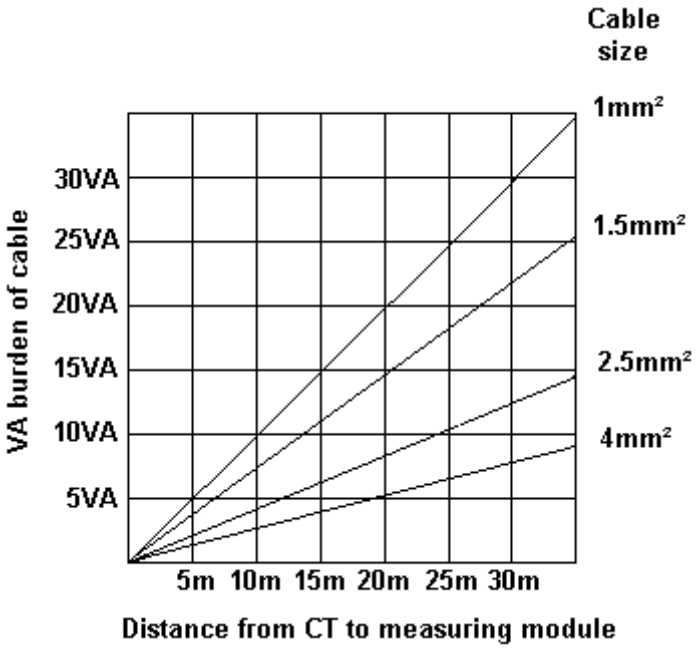

Example:
If 1.5 mm² cable is used and the distance from the CT to the measuring module is 20 m, then the burden of the cable alone is approximately 15 VA. As the burden of the DSE controller is .5 VA, then a CT with a rating of at least 15 VA + 0.5 VA = 15.5 VA must be used. 0.5 VA, then a CT with a rating of at least 15 VA + 0.5 VA = 15.5 VA must be used. If 2.5 mm² cables are used over the same distance of 20 m, then the burden of the cable on the CT is approximately 7 VA. CT's required in this instance is at least 7.5 VA (7 + 0.5).

2.6.2 CT POLARITY

NOTE: Take care to ensure correct polarity of the CT primary as shown above. If in doubt, check with the CT supplier.

Take care to ensure the correct polarity of the CTs. Incorrect CT orientation leads to negative kW readings when the set is supplying power. Take note that paper stick-on labels on CTs that show the orientation are often incorrectly placed on the CT. It is more reliable to use the labelling in the case moulding as an indicator to orientation (if available).

To test orientation, run the generator in island mode (not in parallel with any other supply) and load the generator to around 10 % of the set rating. Ensure the DSE module shows positive kW for all three individual phase readings.

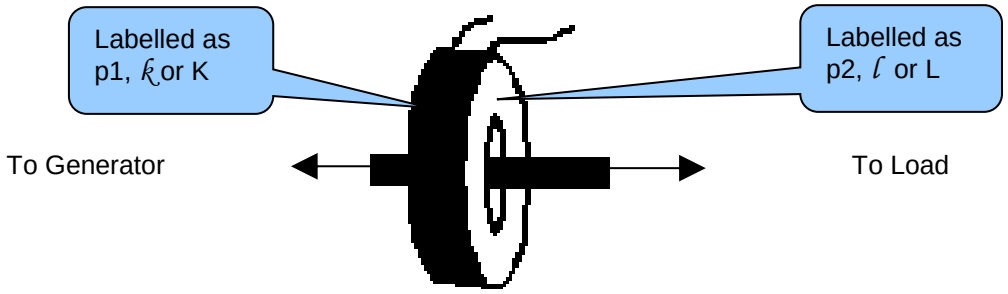

Polarity of CT Primary

2.6.3 CT PHASING

Take particular care that the CTs are connected to the correct phases. For instance, ensure that the CT on phase 1 is connected to the terminal on the DSE module intended for connection to the CT for phase 1.

Additionally, ensure that the voltage sensing for phase 1 is actually connected to generator phase 1. Incorrect connection of the phases as described above results in incorrect power factor (pf) measurements, which in turn results in incorrect kW measurements.

One way to check for this is to make use of a single-phase load. Place the load on each phase in turn, run the generator and ensure the kW value appears in the correct phase. For instance, if the load is connected to phase 3, ensure the kW figure appears in phase 3 display and not in the display for phase 1 or 2.

2.6.4 CT CLASS

Ensure the correct CT type is chosen. For instance, if the DSE module is providing over current protection, ensure the CT is capable of measuring the overload level required to protect against, and at the accuracy level required.

For instance, this may mean fitting a protection class CT (P15 type) to maintain high accuracy while the CT is measuring overload currents.

Conversely, if the DSE module is using the CT for instrumentation only (current protection is disabled or not fitted to the controller), then measurement class CTs can be used. Again, bear in mind the accuracy required. The DSE module is accurate to better than 1% of the full-scale current reading. To maintain this accuracy, fit a Class 0.5 or Class 1 CT.

Check with the CT manufacturer for further advice on selecting CTs.

2.7 INPUTS

2.7.1 DIGITAL INPUTS

Description	Specification
Number	12 configurable digital inputs (16 when *Analogue Inputs* are configured as digital inputs)
Arrangement	Contact between terminal and ground
Low Level Threshold	2.1 V minimum
High Level Threshold	6.6 V maximum
Maximum Input Voltage	+50 V DC with respect to plant supply negative
Minimum Input Voltage	-24 V DC with respect to plant supply negative
Contact Wetting Current	7 mA typical
Open Circuit Voltage	12 V typical

2.7.2 EMERGENCY STOP

Description	Specification
Arrangement	Contact between terminal and module supply positive
Closed Threshold	5 V minimum
Open Threshold	3 V maximum
Maximum Input Voltage	+35 V DC with respect to plant supply negative (60 V protection for 1 minute)
Minimum Input Voltage	-24 V DC with respect to plant supply negative
Open Circuit Voltage	0 V

2.7.3 ANALOGUE INPUTS

All of the analogue inputs are flexible within the DSE8610 MKII module

2.7.3.1 ANALOGUE INPUT A

Description	Specification
Input Type	Flexible: Configured for *Oil Sensor* in the DSE default configuration. Flexible Options: Not used, Digital Input, Flexible Analogue Oil Sensor
Flexible Input Selection	Pressure Sensor, Percentage Sensor or Temperature Sensor
Flexible Measured Quantity	Current, Restive or Voltage

Resistive Configuration

Description	Specification
Measurement Type	Resistance measurement by measuring voltage across sensor with a fixed current applied
Arrangement	Differential resistance measurement input
Measurement Current	15 mA ± 2 mA %
Full Scale	240 Ω
Over Range / Fail	350 Ω
Resolution	±1 % of full scale
Accuracy	±2 % of full-scale resistance (±9.6 Ω) excluding sensor error
Max Common Mode Voltage	±2 V
Display Range	Configurable by PC Software

0 V to 10 V Configuration

Description	Specification
Full Scale	0 V to 10 V
Over Range / Fail	11 V
Resolution	±1% of full scale
Accuracy	±2% of full-scale voltage (±0.2 V) excluding sensor error
Max Common Mode Voltage	±2 V
Display Range	Configurable by PC Software

4 mA to 20 mA Configuration

Description	Specification
Full Scale	0 mA to 20 mA
Over Range / Fail	22 mA
Resolution	1% of full scale
Accuracy	±2% of full-scale current (±0.4 mA) excluding sensor error
Max Common Mode Voltage	±2 V
Display Range	Configurable by PC Software

2.7.3.2 ANALOGUE INPUT B, C & D

Description	Specification
Analogue Input B Type	Flexible: Configured for *Temperature Sensor* in the DSE default configuration. Flexible Options: Not used, Digital Input and Flexible Analogue
Analogue Input C Type	Flexible: Configured for *Fuel Sensor* in the DSE default configuration. Flexible Options: Not used, Digital Input and Flexible Analogue
Analogue Input D Type	Flexible: Configured for *Flexible Analogue* in the DSE default configuration. Flexible Options: Not used, Digital Input and Flexible Analogue
Flexible Input Selection	Pressure Sensor, Percentage Sensor or Temperature Sensor
Flexible Measured Quantity	Current, Restive or Voltage

Resistive Configuration

Description	Specification
Measurement Type	Resistance measurement by measuring voltage across sensor with a fixed current applied
Arrangement	Differential resistance measurement input
Measurement Current	15 mA ±10 %
Full Scale	480 Ω
Over Range / Fail	600 Ω
Resolution	±1 % of full scale
Accuracy	±2 % of full-scale resistance (±9.6 Ω) excluding sensor error
Max Common Mode Voltage	±2 V
Display Range	Configurable by PC Software

0 V to 10 V Configuration

Description	Specification
Full Scale	0 V to 10 V
Over Range / Fail	11 V
Resolution	±1% of full scale
Accuracy	±2% of full-scale voltage (±0.2 V) excluding sensor error
Max Common Mode Voltage	±2 V
Display Range	Configurable by PC Software

4 mA to 20 mA Configuration

Description	Specification
Full Scale	0 mA to 20 mA
Over Range / Fail	22 mA
Resolution	±1% of full scale
Accuracy	±2% of full-scale current (±0.4 mA) excluding sensor error
Max Common Mode Voltage	±2 V
Display Range	Configurable by PC Software

2.7.4 CHARGE FAIL INPUT

The charge fail input is actually a combined input and output. Whenever the generator is required to run, the terminal provides excitation current to the charge alternator field winding.

When the charge alternator is correctly charging the battery, the voltage of the terminal is close to the plant battery supply voltage. In a failed charge situation, the voltage of this terminal is pulled down to a low voltage. It is this drop-in voltage that triggers the *Charge Failure* alarm. The level at which this operates and whether this triggers a warning or shutdown alarm is configurable using the DSE Configuration Suite Software.

Description	Specification
Minimum Voltage	0 V
Maximum Voltage	35 V
Resolution	0.2 V
Accuracy	±1 % of full scale
Excitation	Active circuit constant power output
Output Power	2.5 W nominal at 12 V and 24 V
Current At 12V	210 mA
Current At 24V	105 mA

2.7.5 MAGNETIC PICK-UP

Magnetic Pickup devices can often be ‘shared’ between two or more devices. For example, one device can often supply the signal to both the DSE module and the engine governor. The possibility of this depends upon the amount of current that the magnetic pickup can supply.

Description	Specification
Type	Differential input
Minimum Voltage	0.5 V RMS
Maximum Voltage	70 V RMS
Max Common Mode Voltage	±2 V peak
Minimum Frequency	5 Hz
Maximum Frequency	10,000 Hz
Resolution	6.25 rpm
Accuracy	± 25 rpm
Flywheel Teeth	10 to 500

2.8 OUTPUTS

2.8.1 DC OUTPUTS A & B (FUEL & START)

Description	Specification
Type	Normally used as Fuel & Start outputs. Fully configurable for other purposes if the module is configured to control an electronic engine.
Rating	15 A resistive at Emergency Stop supply.

2.8.2 CONFIGURABLE VOLT-FREE RELAY OUTPUTS C & D

Description	Specification
Type	Normally used for load switching control Fully configurable volt-free relays. Output C normally closed and Output D normal open.
Rating	8 A resistive at 250 V AC

2.8.3 CONFIGURABLE DC OUTPUTS E, F, G, H, I, J, K & L

Description	Specification
Type	Fully configurable, supplied from DC supply terminal 2.
Rating	2 A resistive at module supply.

2.8.4 GOVERNOR CONTROL OUTPUT

Description	Specification
Arrangement	Supplied from DC supply terminal 2
Type	Isolated DC output, voltage controlled
Voltage Range	-5 V to +10 V DC
Max Common Mode Voltage	±1 kV
Resolution	Less than 1 mV
Accuracy	±1%
Minimum Load	500 Ω

2.8.5 AVR CONTROL OUTPUT

Description	Specification
Arrangement	Supplied from DC supply terminal 2
Type	Isolated DC output, voltage controlled
Voltage Range	-5 V to +10 V DC
Max Common Mode Voltage	±3 kV
Resolution	Less than 1 mV
Accuracy	±1 %
Minimum Load	500 Ω

2.9 COMMUNICATION PORTS

NOTE: All communication ports can be used at the same time.

Description	Specification
USB Slave Port	Type B USB 2.0 For connection to PC running DSE Configuration Suite Max distance 5 m (16 feet)
USB Host Port	Type A USB 2.0 Capability to add a maximum of 16 GB USB storage device for data recording only
RS232 Serial Port	Non – isolated Max Baud rate 115.2 kbaud subject to configuration TX, RX, RTS, CTS, DSR, DTR, DCD Male 9-way D type connector Max distance 15 m (49 feet)
2 x RS485 Serial Ports	**NOTE: Only the first RS485 port is currently enabled.** Isolated Data connection 2 wire + common Half Duplex Data direction control for Transmit (by s/w protocol) Max Baud Rate 115.2 kbaud subject to configuration External termination required (120 Ω) Max common mode offset 70 V (on board protection transorb) Max distance 1.2 km (¾ mile)
Ethernet	Auto detecting 10/100 Mbit Ethernet port.
MSC (Multi Set Communication) and CAN Port	**NOTE: For additional length, the DSE124 CAN & MSC Extender is available. For more information, refer to DSE Publication: *057-116 DSE124 Operator Manual*** Standard implementation of 'Slow mode', up to 250 kbit/s Data connection 2 wire + common Isolated External termination required (120 Ω) Max common mode offset 70 V (on board protection transorb) Max distance 250 m (273 yards) using Belden 9841 Cable or equivalent
ECU Port	**NOTE: For additional length, the DSE124 CAN & MSC Extender is available. For more information, refer to DSE Publication: *057-116 DSE124 Operator Manual*** Engine CAN Port Standard implementation of 'Slow mode', up to 250 kbit/s Non-Isolated. Internal Termination enabled by software configuration provided (120 Ω) Max distance 40 m (43.5 yards)
DSENet® (Expansion Comms) Port	Non-isolated Data connection 2 wire + common Half Duplex Data direction control for Transmit (by software protocol) Baud Rate of 115 kbaud Internal termination fitted (120 Ω) Max common mode offset ±5 V Max distance 1.2 km (¾ mile)

2.10 COMMUNICATION PORT USAGE

2.10.1 USB SLAVE PORT (PC CONFIGURATION)

NOTE: DSE stock 2 m (6.5 feet) USB type A to type B cable, DSE Part Number: 016-125. Alternatively, they are purchased from any PC or IT store.

NOTE: The DC supply must be connected to the module for configuration by PC.

NOTE: For further details of module configuration, refer to DSE Publication: 057-238 *DSE8610 MKII Configuration Suite PC Software Manual.*

The USB port is provided to give a simple means of connection between a PC and the controller. Using the DSE Configuration Suite Software, the operator is then able to control the module, starting or stopping the engine, selecting operating modes, etc.

Additionally, the various operating parameters (such as coolant temperature, oil pressure, etc.) of the engine are available to be viewed or changed.

To connect a module to a PC by USB, the following items are required:

DSE86xx MKII Controller



DSE Configuration Suite PC Software
(Available from www.deepseaelectronics.com).



USB cable Type A to Type B.
(This is the same cable as often used between a PC and a USB printer)

DSE can supply this cable if required:
PC Configuration interface lead (USB type A – type B) DSE Part No 016-125



2.10.2 USB HOST PORT (DATA LOGGING)

USB Type A connection for an of external USB storage device of maximum 16 GB for instrumentation data logging. A 16 GB external USB storage device allows for 33 weeks, 4 days and 20 minutes worth of data, assuming 20 parameters were configured to be logged, each with a *Log Interval* of 1 second.

2.10.3 RS232 PORT

NOTE: For direct connection an RS232 null modem (crossover) cable is required. This is rated to a maximum cable length of 15 m.

NOTE: For a single module to PC connection and distances up to 5 m (16 feet) the USB connection method is more suitable and provides for a lower cost alternative to RS485 (which is more suited to longer distance connections).

The RS232 port on the controller supports the MODBUS RTU protocol and is for connection to a single MODBUS master device only.

The MODBUS register table for the controller is available upon request from the DSE Technical Support Department.

RS232 is for short distance communication (max 15m) and is typically used to connect the controller to a telephone or GSM modem for more remote communications.

The various operating parameters (such as coolant temperature, oil pressure, etc.) of the remote engine are viewed or changed.

Many PCs are not fitted with an internal RS232 serial port. DSE DOES NOT recommend the use of USB to RS232 convertors but can recommend PC add-ons to provide the computer with an RS232 port.

2.10.3.1 RECOMMENDED EXTERNAL MODEMS

NOTE: Connecting a modem directly to the module's RS232 is for legacy support only. When a new installation requires remote communication using the cellular network, refer to DSE products DSE890, DSE891 and DSEWebNet on the DSE website: www.deepseaelectronics.com.

NOTE: For GSM modems a SIM card is required, supplied by the GSM network provider:

For SMS only, a 'normal' voice SIM card is required. This enables the controller to send SMS messages to designated mobile phones upon status and alarm conditions.

For a data connection to a PC running DSE Configuration Suite Software, a 'special' CSD (Circuit Switched Data) SIM card is required that enables the modem to answer an incoming data call. Many 'pay as you go' services do not provide a CSD (Circuit Switched Data) SIM card.

MultiTech Global Modem – MultiModem ZBA (PSTN)
DSE Part Number 020-252
(Contact DSE Sales for details of localisation kits for these modems)



Sierra Fastrak Xtend GSM modem kit (PSU, Antenna and modem)*
DSE Part number 0830-001-01



2.10.3.2 RECOMMENDED PC RS232 SERIAL PORT ADD-ONS

NOTE: DSE have no business tie to Brainboxes. Over many years, our own engineers have used these products and are happy to recommend them.

NOTE: For further details of setting up the devices below, refer to the manufacture whose details are below.

Remember to check these parts are suitable for your PC. Consult your PC supplier for further advice.

Brainboxes PM143 PCMCIA RS232 card (for laptop PCs)



Brainboxes VX-001 Express Card RS232 (for laptops and nettops PCs)



Brainboxes UC246 PCI RS232 card (for desktop PCs)



Brainboxes PX-246 PCI Express 1 Port RS232 1 x 9 Pin (for desktop PCs)



Supplier:
Brainboxes
Tel: +44 (0)151 220 2500
Web: http://www.brainboxes.com
Email: sales@brainboxes.com

2.10.4 RS485 PORT

NOTE: For a single module to PC connection and distances up to 5 m (16 feet) the USB connection method is more suitable and provides for a lower cost alternative to RS485 (which is more suited to longer distance connections).

The RS485 port on the controller supports the MODBUS RTU protocol and is for connection to a single MODBUS master device only.

The DSE MODBUS register table for the controller is available upon request from the DSE Technical Support Department.

RS485 is used for point-to-point cable connection of more than one device (maximum 32 devices) and allows for connection to PCs, PLCs and Building Management Systems (to name just a few devices).

One advantage of the RS485 interface is the large distance specification (1.2 km when using Belden 9841 (or equivalent) cable. This allows for a large distance between the module and a PC running the DSE Configuration Suite software. The operator is then able to control the module, starting or stopping the engine, selecting operating modes, etc.

The various operating parameters (such as coolant temperature, oil pressure, etc.) of the remote engine are viewed or changed.

Many PCs are not fitted with an internal RS485 serial port. DSE DOES NOT recommend the use of USB to RS485 convertors but can recommend PC add-ons to provide the computer with an RS485 port.

2.10.4.1 CABLE SPECIFICATION

NOTE: DSE recommend Belden 9841 (or equivalent) cable for RS485 communication. This is rated to a maximum cable length of 1.2 km. DSE Stock Belden 9841 cable, DSE Part Number: 016-030.

Description	Specification
Cable Type	Two core screened and shielded twisted pair
Cable Characteristics	120 Ω impedance Low capacitance
Recommended Cable	Belden 9841 Belden 9271
Maximum Cable Length	1.2 km (¾ mile) when using Belden 9841 or direct equivalent. 600 m (656 yards) when using Belden 9271 or direct equivalent.
RS485 Topology	“Daisy Chain” Bus with no stubs (spurs)
RS485 Termination	120 Ω. Not fitted internally to module. Must be fitted externally to the ‘first’ and ‘last’ device on the RS485 link.

2.10.4.2 RECOMMENDED PC RS485 SERIAL PORT ADD-ONS

NOTE: DSE have no business tie to Brainboxes. Over many years, our own engineers have used these products and are happy to recommend them.

NOTE: For further details of setting up the devices below, refer to the manufacture whose details are below.

Remember to check these parts are suitable for your PC. Consult your PC supplier for further advice.

Brainboxes PM154 PCMCIA RS485 card (for laptops PCs)
Set to 'Half Duplex, Autogating" with 'CTS True' set to 'enabled'



Brainboxes VX-023 ExpressCard 1 Port RS422/485 (for laptops and nettop PCs)



Brainboxes UC320 PCI Velocity RS485 card (for desktop PCs)
Set to 'Half Duplex, Autogating" with 'CTS True' set to 'enabled'



Brainboxes PX-324 PCI Express 1 Port RS422/485 (for desktop PCs)



Supplier:
Brainboxes
Tel: +44 (0)151 220 2500
Web: http://www.brainboxes.com
Email: sales@brainboxes.com

2.10.4.3 RS485 USED FOR MODBUS ENGINE CONNECTION

NOTE: For further details of module configuration, refer to DSE Publication: 057-238 *DSE8610 MKII Configuration Suite PC Software Manual.*

The RS485 port can be configured for connection to Cummins MODBUS engines (Engines fitted with Cummins GCS (G-Drive Control System)).
This leaves the DSENet® interface free for connection to expansion devices.

While this is a very useful feature in some applications, the obvious drawback is that the RS485 interface is no longer available connection or remote monitoring equipment (i.e. Building Management System, PLC or PC RS232 port) or dual mutual system.

Example of configuring the DSENet® for connection to Cummins QSK GCS using the DSE Configuration Suite Software:

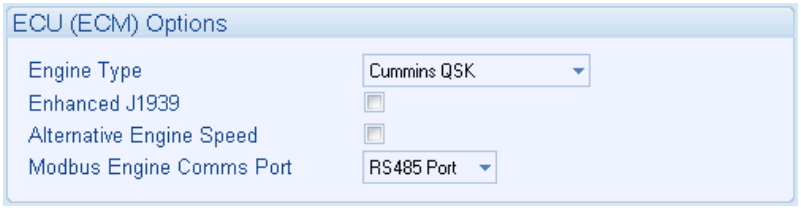

2.10.5 ETHERNET PORT

NOTE: For further details of module configuration, refer to DSE Publication: 057-238 *DSE8610 MKII Configuration Suite PC Software Manual.*

NOTE: For a single module to PC connection and distances up to 5 m (16 feet) the USB connection method is more suitable and provides for a lower cost alternative to Ethernet (which is more suited to longer distance connections).

NOTE: DSE stock 2 m (6.5 feet) Ethernet Cable, DSE Part Number: 016-137. Alternatively, they can be purchased from any PC or IT store.

Ethernet is used for point-to-point cable connection of more than one device and allows for connection to PCs, PLCs, Building Management Systems and SNMP Managers (to name just a few devices).

One advantage of the Ethernet interface is the ability to interface into an existing LAN (Local Area Network) connection for remote connection via an internet connection. This allows for a large distance between the module and a PC running the DSE Configuration Suite software or any external device. The operator is then able to control the module, starting or stopping the engine, selecting operating modes, etc through various different means.

2.10.5.1 MODBUS TCP

The Ethernet port on the controller supports the Modbus TCP protocol and is for connection for up to five Modbus master devices. The various operating parameters (such as coolant temperature, oil pressure, etc.) of the remote engine are viewed or changed.

The DSE MODBUS register table for the controller is available upon request from the DSE Technical Support Department.

2.10.5.2 SNMP

NOTE: For further details of module configuration, refer to DSE Publication: 057-238 *DSE8610 MKII Configuration Suite PC Software Manual.*

The Ethernet port on the controller supports V2c of the Simple Network Management Protocol (SNMP) and is able to connect to two SNMP managers. SNMP is an international standard protocol for managing devices on IP networks. It is used to monitor network-attached devices for conditions that warrant administrative attention.

Up to two administrative computers (SNMP managers) monitor the DSE module. Should an 'event' occur, the DSE module reports information via SNMP TRAP messages to the SNMP manager. The SNMP TRAP messages that are sent are configured used the DSE Configuration Suite PC Software by the system integrator. An example of the available SNMP TRAP messages is shown below.



Additionally, the DSE module responds to GET / SET messages from the SNMP manager to allow the operating mode of the DSE module to be changed, or instrumentation values to be retrieved. The SNMP manager knows how to communicate to the DSE module by using the .MIB file provided by DSE.

Many third-party SNMP managers exist. DSE do not produce or supply SNMP managers.

The DSE MIB file for the controller is available upon request from the DSE Technical Support Department or by downloading it from the DSE website, www.deepseaelectronics.com.

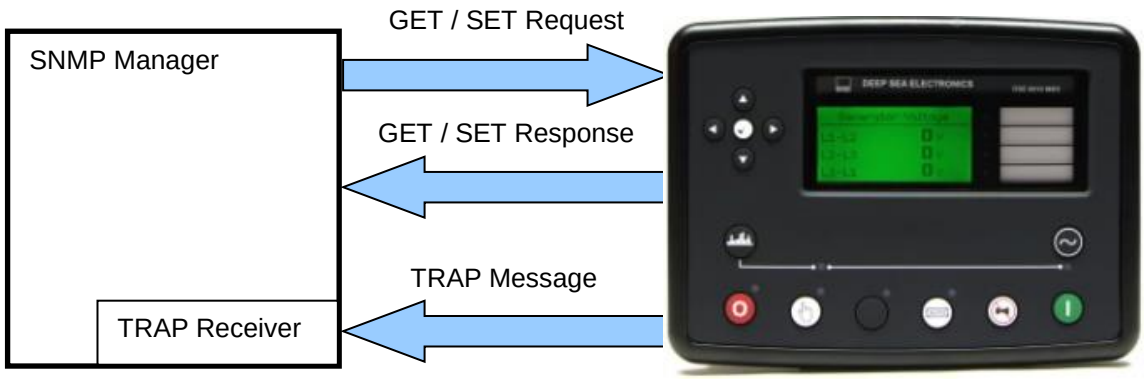

2.10.5.3 DIRECT PC CONNECTION

Requirements

- Ethernet cable (see below)
- PC with Ethernet port

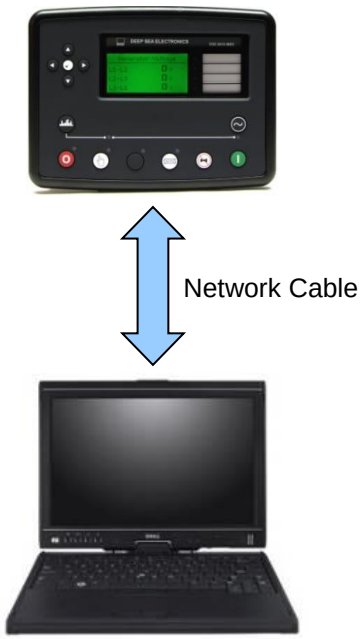

Ethernet Cable Wiring Detail

NOTE: DSE stock 2 m (6.5 feet) Ethernet Cable, DSE Part Number: 016-137. Alternatively, they can be purchased from any PC or IT store.

Pin	Connection 1 (T568A)	Connection 2 (T568A)
1	white/green stripe	white/green stripe
2	green solid	green solid
3	white/orange stripe	white/orange stripe
4	blue solid	blue solid
5	white/blue stripe	white/blue stripe
6	orange solid	orange solid
7	white/brown stripe	white/brown stripe
8	brown solid	brown solid

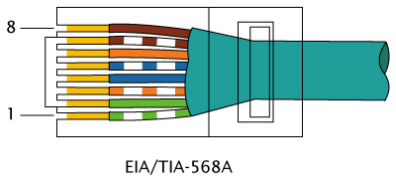

EIA/TIA-568A

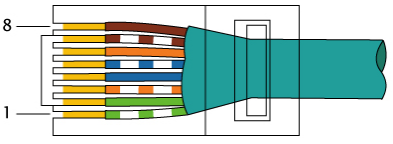

EIA/TIA-568A

2.10.5.4 CONNECTION TO BASIC ETHERNET

Requirements

- Ethernet cable (see below)
- Working Ethernet (company or home network)
- PC with Ethernet port

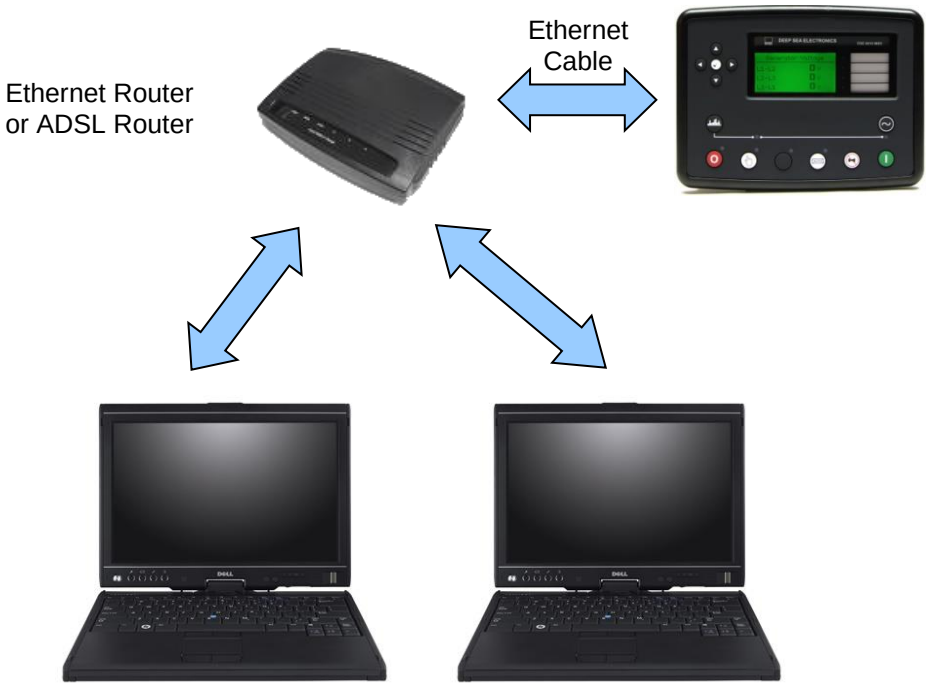

Ethernet Cable Wiring Detail

NOTE: DSE stock 2 m (6.5 feet) Ethernet Cable, DSE Part Number: 016-137. Alternatively, they can be purchased from any PC or IT store.

Pin	Connection 1 (T568A)	Connection 2 (T568A)	
1	white/green stripe	white/green stripe	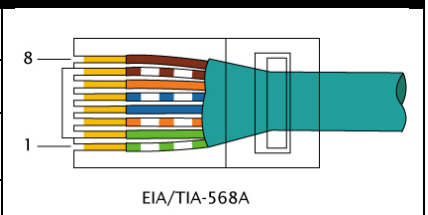
2	green solid	green solid	
3	white/orange stripe	white/orange stripe	
4	blue solid	blue solid	
5	white/blue stripe	white/blue stripe	
6	orange solid	orange solid	
7	white/brown stripe	white/brown stripe	
8	brown solid	brown solid	

2.10.5.5 CONNECTION TO COMPANY ETHERNET INFRASTRUCTURE

Requirements

- DSE module with the ability to connect to Ethernet
- Ethernet cable (see below)
- Working Ethernet (company or home network)
- PC with Ethernet port

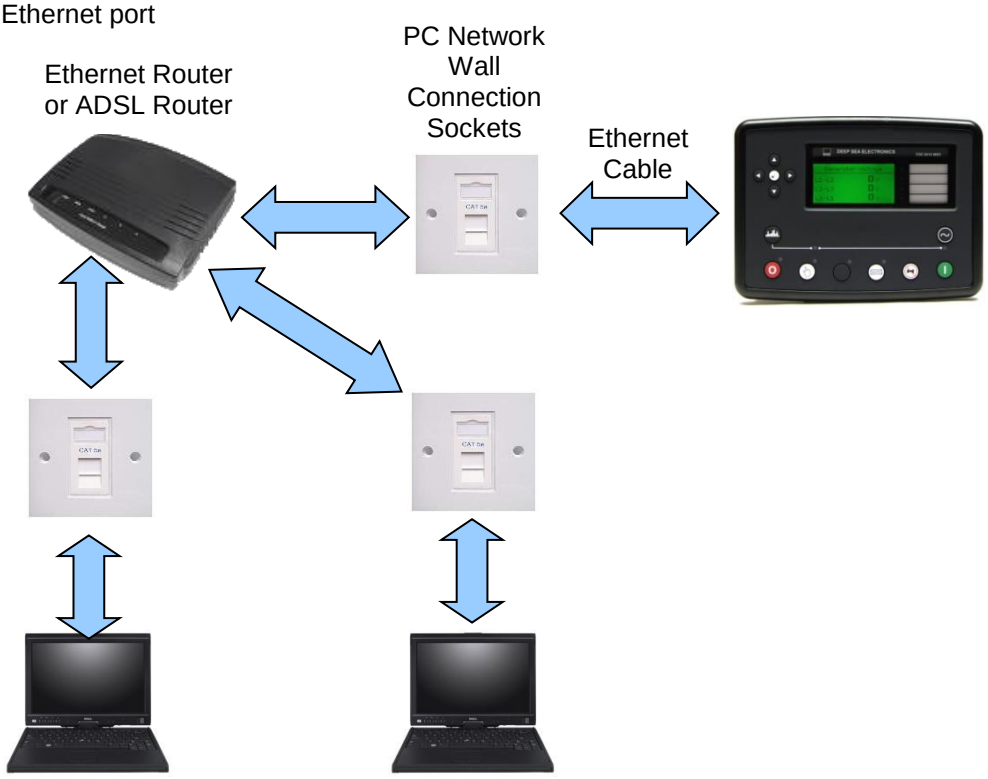

Ethernet Cable Wiring Detail

NOTE: DSE stock 2 m (6.5 feet) Ethernet Cable, DSE Part Number: 016-137. Alternatively, they can be purchased from any PC or IT store.

Pin	Connection 1 (T568A)	Connection 2 (T568A)
1	white/green stripe	white/green stripe
2	green solid	green solid
3	white/orange stripe	white/orange stripe
4	blue solid	blue solid
5	white/blue stripe	white/blue stripe
6	orange solid	orange solid
7	white/brown stripe	white/brown stripe
8	brown solid	brown solid

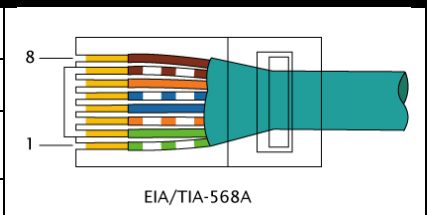

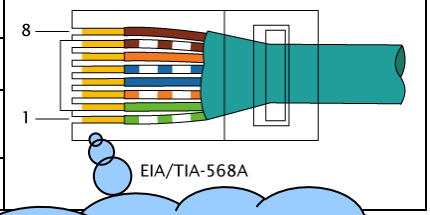

For the advanced Engineer, this cable has both ends terminated as T568A or T568B.

2.10.5.6 CONNECTION TO THE INTERNET

Requirements

- Ethernet cable (see below)
- Working Ethernet (company or home network)
- Working Internet connection (ADSL or DSL recommended)

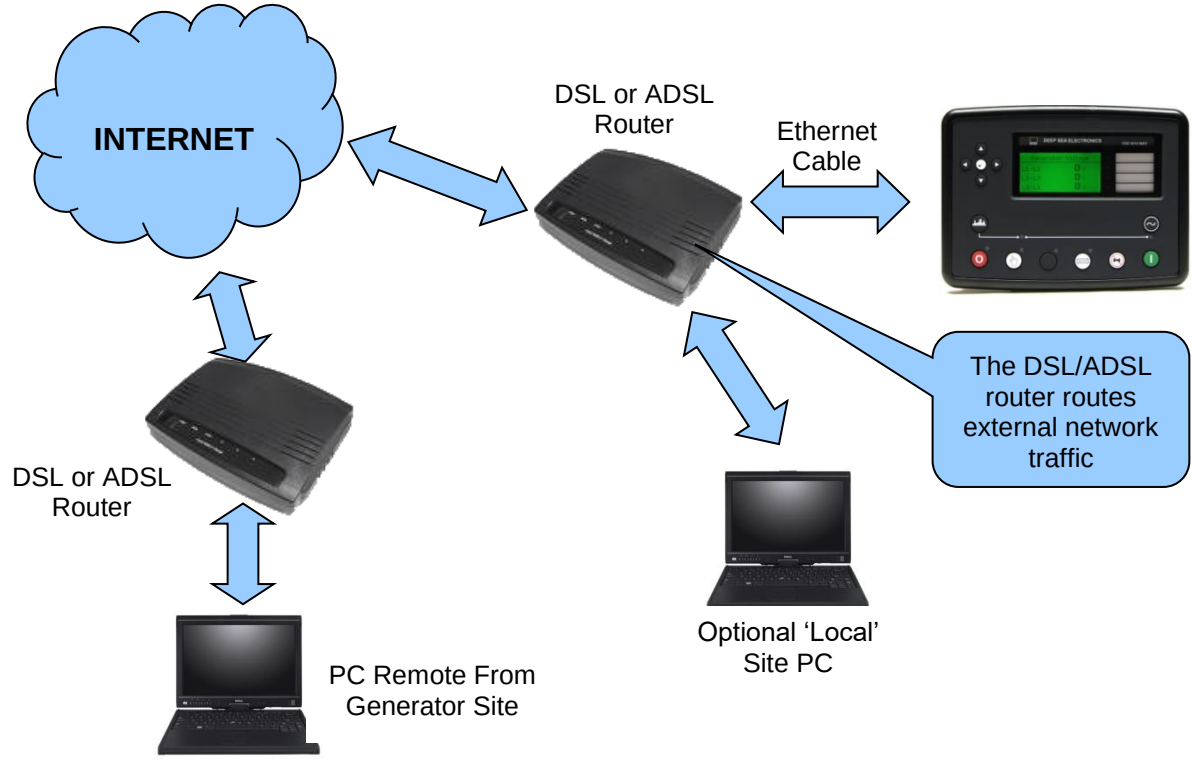

Ethernet Cable Wiring Detail

NOTE: DSE stock 2 m (6.5 feet) Ethernet Cable, DSE Part Number: 016-137. Alternatively, they can be purchased from any PC or IT store.

Pin	Connection 1 (T568A)	Connection 2 (T568A)	
1	white/green stripe	white/green stripe	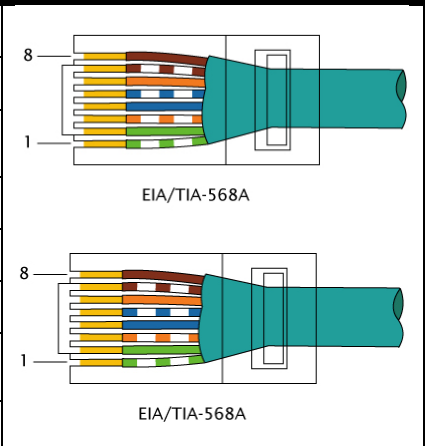
2	green solid	green solid	
3	white/orange stripe	white/orange stripe	
4	blue solid	blue solid	
5	white/blue stripe	white/blue stripe	
6	orange solid	orange solid	
7	white/brown stripe	white/brown stripe	
8	brown solid	brown solid	

2.10.5.7 FIREWALL CONFIGURATION FOR INTERNET ACCESS

NOTE: For further details of module configuration, refer to DSE Publication: 057-238 *DSE8610 MKII Configuration Suite PC Software Manual.*

As modem/routers differ enormously in their configuration, it is not possible for DSE to give a complete guide to their use with the module. However, it is possible to give a description of the requirements in generic terms. For details of how to achieve the connection to your modem/router you are referred to the supplier of your modem/router equipment.

The module makes its data available over Modbus TCP or SNMP V2c and as such communicates over the Ethernet using a Port configured via the DSE Configuration Suite software.

You must configure your modem/router to allow inbound traffic on this port. For more information you are referred to your WAN interface device (modem/router) manufacturer.

It is also important to note that if the port assigned is already in use on the LAN, the module cannot be used, and another port must be used.

Outgoing Firewall Rule

As the module makes its user interface available to standard web browsers, all communication uses the chosen port. It is usual for a firewall to make the same port outgoing open for communication.

Incoming Traffic (Virtual Server)

Network Address and Port Translation (NAPT) allows a single device, such as the modem/router gateway, to act as an agent between the Internet (or "public external network") and a local (or "internal private") network. This means that only a single, unique IP address is required to represent an entire group of computers.

For our application, this means that the WAN IP address of the modem/router is the IP address we need to access the site from an external (internet) location.

When the requests reach the modem/router, we want this passed to a ‘virtual server’ for handling, in our case this is the module.

Result: Traffic arriving from the WAN (internet) on port xxx is automatically sent to IP address set within the configuration software on the LAN for handling.

2.10.6 MSC (MULTI-SET COMMUNICATIONS) LINK

NOTE: For further details of module configuration, refer to DSE Publication: 057-238 *DSE8610 MKII Configuration Suite PC Software Manual.*

NOTE: A termination resistor MUST be fitted to the first and last unit on the MSC link. For connection details, refer to section entitled *Typical Arrangement of MSC Link* elsewhere in this document.

NOTE: DSE recommend Belden 9841 (or equivalent) cable for MSC communication. This is rated to a maximum cable length of 250 m. DSE Stock Belden 9841 cable, DSE Part Number: 016-030.

NOTE: By default, the MSC link of the DSE8xxx modules are not compatible with the DSE55xx/DSE75xx modules. For details on enabling compatibility, refer to section entitled *MSC Compatibility* elsewhere in this document.

The MSC link is the interconnection cable between all DSE synchronising controllers and must not be connected to any device other than DSE equipment designed for connection to the MSC link.

Description	Specification
Cable Type	Two core screened and shielded twisted pair
Cable Characteristics	120 Ω impedance Low capacitance
Recommended Cable	Belden 9841 Belden 9271
Maximum Cable Length	**NOTE: For additional length, the DSE124 CAN & MSC Extender is available. For more information, refer to DSE Publication: *057-116 DSE124 Operator Manual*** 250 m (273 yards) when using Belden 9841 or direct equivalent. 125 m (136 yards) when using Belden 9271 or direct equivalent.
MSC Topology	"Daisy Chain" Bus with no stubs (spurs)
MSC Termination	120 Ω. Must be fitted externally to the first and last module.
Maximum DSE8xxx and DSE8xxx MKII Modules	**NOTE: If any number of DSE8x60 are on the MSC link, a maximum of 2x DSE8x80 can be used. For each DSE8x80 used, the number of available DSE8x60s to be used reduces.** Total 40 devices made up of DSE8x10 (up to 32), DSE8x60 (up to 16) and DSE8x80 (up to 16) This gives the possibility of : • 32 generators (DSE8x10) and 8 synchronising transfers (DSE8x60) • 32 generators (DSE8x10) and 8 generator bus couplers (DSE8x80) • 24 generators (DSE8x10) and 16 synchronising transfers (DSE8x60) • 24 generators (DSE8x10) and 16 generator bus couplers (DSE8x80) • 32 generators (DSE8x10), **14** synchronising transfers (DSE8x60) and **2** generator bus couplers (DSE8x80)

2.10.8 CAN PORT (REDUNDANT MSC)

NOTE: The redundant MSC link connectivity is only available in DSE8xxx MKII modules V3 and above. Contact DSE technical support: support@deepseaelectronics.com for more information.

NOTE: A termination resistor MUST be fitted to the first and last unit on the MSC link. For connection details, refer to section entitled *Typical Arrangement of MSC Link* elsewhere in this document.

NOTE: DSE recommend Belden 9841 (or equivalent) cable for MSC communication. This is rated to a maximum cable length of 250 m. DSE Stock Belden 9841 cable, DSE Part Number: 016-030.

The additional CAN port can be used as a redundant MSC link between the DSE8xxx MKII modules. The MSC link is the interconnection cable between all DSE synchronising controllers and must not be connected to any device other than DSE equipment designed for connection to the MSC link. Upon the main MSC link failing for any reason, the user can configure the DSE8xxx MKII modules revert to the Redundant MSC Link connection using the CAN Port connection. An example of configuring the Redundant MSC Link connection the DSE Configuration Suite Software is shown below:

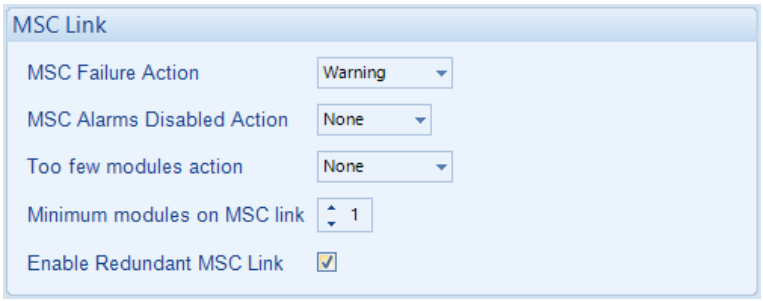

Description	Specification
Cable Type	Two core screened and shielded twisted pair
Cable Characteristics	120 Ω impedance Low capacitance
Recommended Cable	Belden 9841 Belden 9271
Maximum Cable Length	**NOTE: For additional length, the DSE124 CAN & MSC Extender is available. For more information, refer to DSE Publication: *057-116 DSE124 Operator Manual*** 250 m (273 yards) when using Belden 9841 or direct equivalent. 125 m (136 yards) when using Belden 9271 or direct equivalent.
Redundant MSC Topology	“Daisy Chain” Bus with no stubs (spurs)
Redundant MSC Termination	120 Ω. Must be fitted externally to the first and last module.
Maximum DSE8xxx MKII Modules	Total 40 devices made up of DSE8x10 MKII (up to 32) and DSE8x60 MKII (up to 16) This gives the possibility of : • 32 generators (DSE8x10 MKII) and 8 synchronising transfers (DSE8x60 MKII) • 24 generators (DSE8x10 MKII) and 16 synchronising transfers (DSE8x60 MKII)

2.10.9 ECU PORT (J1939)

NOTE: For further details of module configuration, refer to DSE Publication: 057-238 *DSE8610 MKII Configuration Suite PC Software Manual.*

NOTE: For further details on connection to electronic engines, refer to DSE Publication: *057-004 Electronic Engines And DSE Wiring*

NOTE: Screened 120 Ω impedance cable specified for use with CAN must be used for the CAN link.
DSE stock and supply Belden cable 9841 which is a high quality 120 Ω impedance cable suitable for CAN use (DSE part number 016-030)

NOTE: For additional length, the DSE124 CAN & MSC Extender is available. For more information, refer to DSE Publication: *057-116 DSE124 Operator Manual*

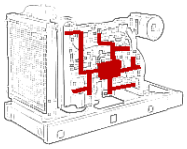

The modules are fitted with a CAN interface as standard and are capable of receiving engine data from engine ECU/ECMs compliant with the CAN J1939 standard.

ECU/ECMs monitor the engine's operating parameters such as speed, oil pressure, coolant temperature (among others) in order to closely monitor and control the engine. The industry standard communications interface (CAN) transports data gathered by the engine's ECU/ECM using the J1939 protocol. This allows engine controllers such as DSE to access these engine parameters with no physical connection to the sensor device.

The *ECU Port* is used for point-to-point cable connection of more than one device and allows for connection to CAN Scanner, PLC and CAN controllers (to name just a few devices). The operator is then able to view the various operating parameters.

2.10.9.1 J1939-75

NOTE: For further details of module configuration, refer to DSE Publication: *057-238 DSE8610 MKII Configuration Software Manual*

NOTE: For further details of CAN communication, see the section entitled *CAN Interface Specification (J1939-75)* elsewhere in this document.

When the J1939-75 is enabled in the module's configuration, the module's AC measurements and alarms are sent onto the CANbus using the *ECU Port*, received typically by an external monitoring device. There are two tick boxes to enable each of the two parts of the interface as shown below, these are AC measurement and AC related alarms. The module AC alarms are translated into J1939 DM1 diagnostic messages. There are no additional display screens visible on the module when these options are selected. The default CAN source address the module transmits the additional J1939-75 messages is 44. This is configurable by the generator supplier if there is another CAN device already using this source address.

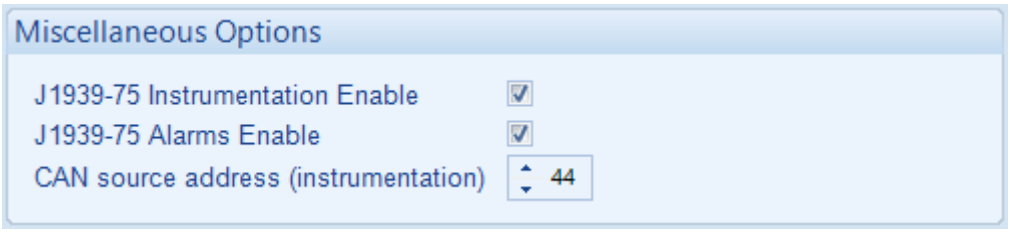

2.10.10 DSENET® (EXPANSION MODULES)

NOTE: For further details of module configuration, refer to DSE Publication: 057-238 *DSE8610 MKII Configuration Suite PC Software Manual.*

NOTE: As a termination resistor is internally fitted to the controller, the controller must be the 'first' unit on the DSENet® link. A termination resistor MUST be fitted to the 'last' unit on the DSENet® link. For connection details, refer to section entitled *Typical Arrangement of DSENet®* elsewhere in this document.

NOTE: DSE recommend Belden 9841 (or equivalent) cable for DSENet® communication. This is rated to a maximum cable length of 1.2 km. DSE Stock Belden 9841 cable, DSE Part Number: 016-030.

DSENet® is the interconnection cable between the host controller and the expansion module(s) and must not be connected to any device other than DSE equipment designed for connection to the DSENet®

Description	Specification
Cable Type	Two core screened and shielded twisted pair
Cable Characteristics	120 Ω impedance Low capacitance
Recommended Cable	Belden 9841 Belden 9271
Maximum Cable Length	1.2 km (¾ mile) when using Belden 9841 or direct equivalent. 600 m (656 yards) when using Belden 9271 or direct equivalent.
DSENet® Topology	"Daisy Chain" Bus with no stubs (spurs)
DSENet® Termination	120 Ω. Fitted internally to host controller. Must be fitted externally to the 'last' expansion module.
Maximum Expansion Modules	**NOTE: Only supported DSE Intelligent Battery Chargers may be connected to the DSENet®. Contact DSE Technical Support for further information.** Total 20 devices made up of DSE2130 (up to 4), DSE2131 (up to 4), DSE2133 (up to 4), DSE2152 (up to 4), DSE2157 (up to 10), DSE2548 (up to 10) and DSE Intelligent Battery Chargers (up to 4) This gives the possibility of : • Maximum 32 additional 0-10 V or 4-20 mA outputs (DSE2152) • Maximum 80 additional relay outputs (DSE2157) • Maximum 80 additional LED indicators (DSE2548) • Maximum 24 additional RTD or thermocouple inputs (DSE2133). • Maximum 32 additional inputs (Can be configured as either digital, or resistive when using DSE2130) • Maximum 40 additional flexible inputs (All can be configured as either digital, resistive, 0-10 V or 4-20 mA when using DSE2131) • Maximum 4 DSE Intelligent Battery Chargers.

2.10.10.1 DSENET® USED FOR MODBUS ENGINE CONNECTION

NOTE: For further details of module configuration, refer to DSE Publication: 057-238 *DSE8610 MKII Configuration Suite PC Software Manual.*

As DSENet® utilises an RS485 hardware interface, this port can be configured for connection to Cummins MODBUS engines (Engines fitted with Cummins GCS (G-Drive Control System)). This leaves the RS485 interface free for connection to remote monitoring equipment (i.e. Building Management System, PLC or PC RS485 port).

While this is a very useful feature in some applications, the obvious drawback is that the DSENet® interface is no longer available for connection to expansion devices.

Example of configuring the DSENet® for connection to Cummins QSK GCS using the DSE Configuration Suite Software:

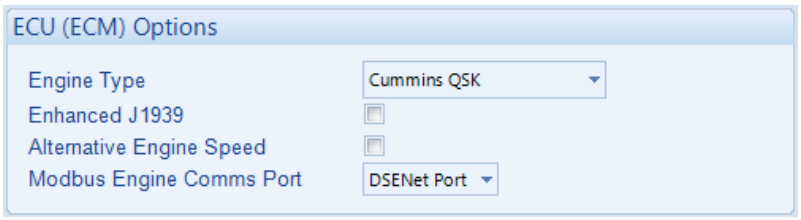

2.11 SOUNDER

The module features an internal sounder to draw attention to warning, electrical trip and shutdown alarms.

Description	Specification
Sounder Level	64 dB at 1 m

2.11.1 ADDING AN EXTERNAL SOUNDER

Should an external alarm or indicator be required, this can be achieved by using the DSE Configuration Suite PC software to configure an auxiliary output for *Audible Alarm,* and by configuring an auxiliary input for *Alarm Mute* (if required).

The audible alarm output activates and de-activates at the same time as the module's internal sounder. The Alarm mute input and internal ***Lamp Test / Alarm Mute*** button activate 'in parallel' with each other. Either signal mutes both the internal sounder and audible alarm output.

Example of configuration to achieve external sounder with external alarm mute button:



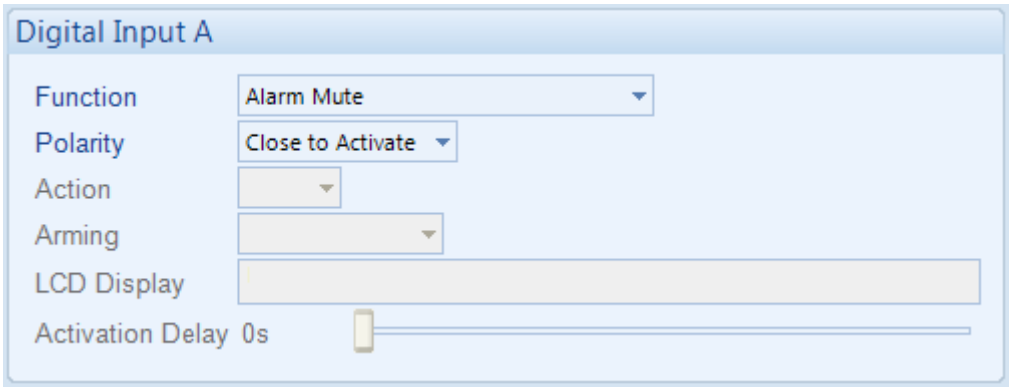

2.12 ACCUMULATED INSTRUMENTATION

NOTE: When an accumulated instrumentation value exceeds the maximum number as listed below, the value is reset and begins counting from zero again.

The number of logged *Engine Hours* and *Number of Starts* can be set/reset using the DSE Configuration Suite PC software. Depending upon module configuration, this may have been PIN number locked by the generator supplier.

Description	Specification
Engine Hours Run	Maximum 99999 hrs 59 minutes (Approximately 11yrs 4 months)
Number of Starts	1,000,000 (1 Million)
Accumulated Power	999999 kWh / kvarh / kVAh

2.13 DIMENSIONS AND MOUNTING

2.13.1 DIMENSIONS

245 mm x 184 mm x 51 mm
(9.6 ” x 7.2 ” x 2.0 ”)

2.13.2 PANEL CUTOUT

220 mm x 159 mm
(8.7” x 6.3”)

2.13.3 WEIGHT

0.98 kg
(2.16 lb)

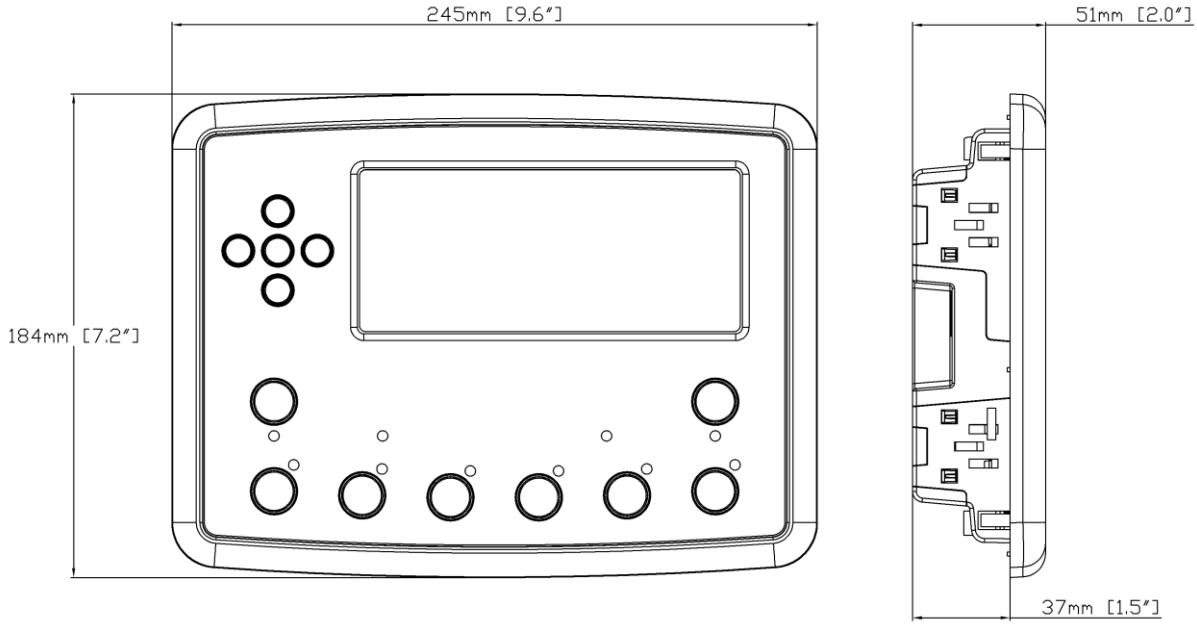

2.13.4 FIXING CLIPS

NOTE: In conditions of excessive vibration, mount the module on suitable anti-vibration mountings.

The module is held into the panel fascia using the supplied fixing clips:

- Withdraw the fixing clip screw (turn anticlockwise) until only the pointed end is protruding from the clip.
- Insert the three ‘prongs’ of the fixing clip into the slots in the side of the module case.
- Pull the fixing clip backwards (towards the back of the module) ensuring all three prongs of the clip are inside their allotted slots.
- Turn the fixing clip screws clockwise until they make contact with the panel fascia.
- Turn the screw a quarter of a turn to secure the module into the panel fascia. Care must be taken not to over tighten the fixing clip screws.

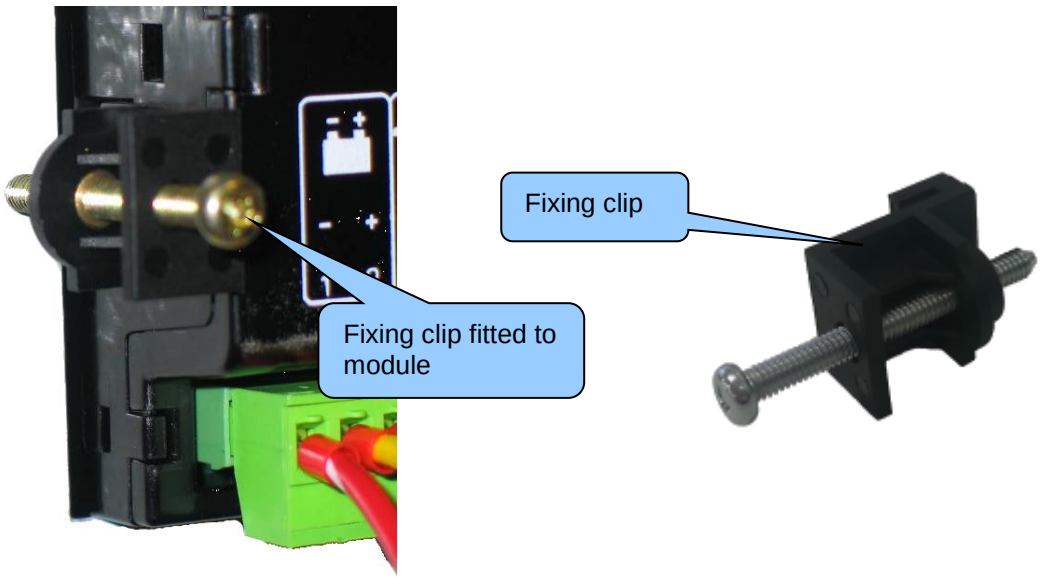

2.13.5 CABLE TIE FIXING POINTS

Cable tie fixing points are included on the rear of the module's case to aid wiring. This additionally provides strain relief to the cable loom by removing the weight of the loom from the screw connectors, reducing the chance of future connection failures.

Care must be taken not to over tighten the cable tie (for instance with cable tie tools) to prevent the risk of damage to the module case.



Cable Tie Fixing Point



With Cable And Tie In Place

2.13.6 SILICON SEALING GASKET

NOTE: For purchasing a silicon gasket from DSE, see the section entitled Maintenance, Spares, Repair and Servicing elsewhere in this document.

The silicon gasket provides improved sealing between module and the panel fascia. The gasket is fitted to the module before installation into the panel fascia. Take care to ensure the gasket is correctly fitted to the module to maintain the integrity of the seal.

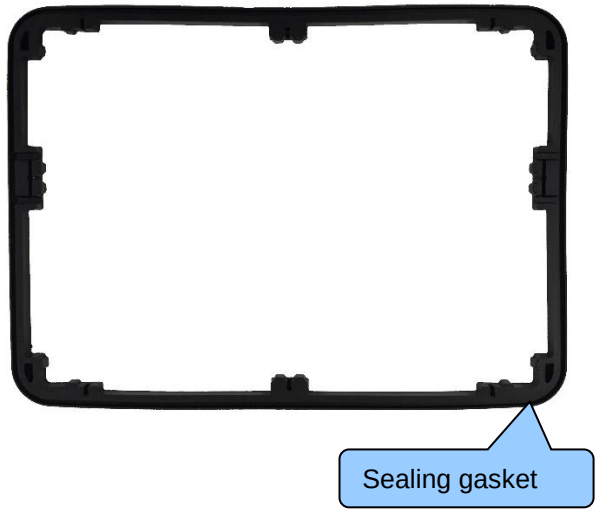



2.14 APPLICABLE STANDARDS

Standard	Description
BS 4884-1	This document conforms to BS4884-1 1992 Specification for presentation of essential information.
BS 4884-2	This document conforms to BS4884-2 1993 Guide to content
BS 4884-3	This document conforms to BS4884-3 1993 Guide to presentation
BS EN 60068-2-1 (Minimum temperature)	-30 °C (-22 °F)
BS EN 60068-2-2 (Maximum temperature)	+70 °C (158 °F)
BS EN 60068-2-6 (Vibration)	Ten sweeps in each of three major axes 5 Hz to 8 Hz at ± 7.5 mm 8 Hz to 500 Hz at 2 gn
BS EN 60068-2-27 (Shock)	Three shocks in each of three major axes 15 gn in 11 ms
BS EN 60068-2-30 (Damp heat cyclic)	20 °C to 55 °C at 95% relative humidity for 48 hours
BS EN 60068-2-78 (Damp heat static)	40 °C at 95% relative humidity for 48 hours
BS EN 60950 (Electrical safety)	Safety of information technology equipment, including electrical business equipment
BS EN 61000-6-2 (Electro-magnetic Compatibility)	EMC Generic Immunity Standard (Industrial)
BS EN 61000-6-4 (Electro-magnetic Compatibility)	EMC Generic Emission Standard (Industrial)
BS EN 60529 (Degrees of protection provided by enclosures)	IP65 (front of module when installed into the control panel with the sealing gasket) IP42 (front of module when installed into the control panel WITHOUT being sealed to the panel)
UL508 NEMA rating (Approximate)	12 (Front of module when installed into the control panel with the sealing gasket). 2 (Front of module when installed into the control panel WITHOUT being sealed to the panel)
IEEE C37.2 (Standard Electrical Power System Device Function Numbers and Contact Designations)	Under the scope of IEEE 37.2, function numbers can also be used to represent functions in microprocessor devices and software programs. The controller is device number 11L-8000 (Multifunction device protecting Line (generator) –module). As the module is configurable by the generator OEM, the functions covered by the module vary. Depending on module configuration, the device numbers included within the module could be: 2 – Time delay starting or closing relay 3 – Checking or interlocking relay 5 – Stopping device 6 – Starting circuit breaker 8 – Control power disconnecting device 10 – Unit sequence switch 11 – Multifunction device 12 – Overspeed device 14 – Under speed device

Continued over the page...

Standard	Description
IEEE C37.2 (Standard Electrical Power System Device Function Numbers and Contact Designations)	Continued… 15 – Speed or frequency matching device. 23 – Temperature control device 25 – Synchronising or synchronism check relay 26 – Apparatus thermal device 27AC – AC undervoltage relay 27DC – DC undervoltage relay 29 – Isolating contactor or switch 30 – Annunciator relay 31 – Separate Excitation Device 37 – Undercurrent or underpower relay (**USING INTERNAL PLC EDITOR**) 40 – Field relay / Loss of excitation 42 – Running circuit breaker 44 – Unit sequence relay 46 – Reverse-phase or phase-balance current relay 48 – Incomplete sequence relay 49 – Machine or transformer thermal relay 50 – Instantaneous overcurrent relay 51 – AC time overcurrent relay 52 – AC circuit breaker 53 – Exciter or DC generator relay 54 – Turning gear engaging device 55 – Power factor relay (**USING INTERNAL PLC EDITOR**) 59AC – AC overvoltage relay 59DC – DC overvoltage relay 62 – Time delay stopping or opening relay 63 – Pressure switch 71 – Level switch 74 – Alarm relay 78 – Phase-angle measuring relay 79 – Reclosing relay (**USING INTERNAL PLC EDITOR**) 81 – Frequency relay 83 – Automatic selective control or transfer relay 86 – Lockout relay

In line with our policy of continual development, Deep Sea Electronics, reserve the right to change specification without notice.

2.14.1 ENCLOSURE CLASSIFICATIONS

2.14.1.1 IP CLASSIFICATIONS

The modules specification under BS EN 60529 Degrees of protection provided by enclosures

IP65 (Front of module when module is installed into the control panel with the optional sealing gasket).
IP42 (front of module when module is installed into the control panel WITHOUT being sealed to the panel)

First Digit Protection against contact and ingress of solid objects	Second Digit Protection against ingress of water
0 No protection	0 No protection
1 Protected against ingress solid objects with a diameter of more than 50 mm. No protection against deliberate access, e.g. with a hand, but large surfaces of the body are prevented from approach.	1 Protection against dripping water falling vertically. No harmful effect must be produced (vertically falling drops).
2 Protected against penetration by solid objects with a diameter of more than 12 mm. Fingers or similar objects prevented from approach.	2 Protection against dripping water falling vertically. There must be no harmful effect when the equipment (enclosure) is tilted at an angle up to 15° from its normal position (drops falling at an angle).
3 Protected against ingress of solid objects with a diameter of more than 2.5 mm. Tools, wires etc. with a thickness of more than 2.5 mm are prevented from approach.	3 Protection against water falling at any angle up to 60° from the vertical. There must be no harmful effect (spray water).
4 Protected against ingress of solid objects with a diameter of more than 1 mm. Tools, wires etc. with a thickness of more than 1 mm are prevented from approach.	4 Protection against water splashed against the equipment (enclosure) from any direction. There must be no harmful effect (splashing water).
5 Protected against harmful dust deposits. Ingress of dust is not totally prevented but the dust must not enter in sufficient quantity to interface with satisfactory operation of the equipment. Complete protection against contact.	5 Protection against water projected from a nozzle against the equipment (enclosure) from any direction. There must be no harmful effect (water jet).
6 Protection against ingress of dust (dust tight). Complete protection against contact.	6 Protection against heavy seas or powerful water jets. Water must not enter the equipment (enclosure) in harmful quantities (splashing over).

2.14.1.2 NEMA CLASSIFICATIONS

NOTE: There is no direct equivalence between IP / NEMA ratings. IP figures shown are approximate only.

12 (Front of module when module is installed into the control panel with the optional sealing gasket).
2 (Front of module when module is installed into the control panel WITHOUT being sealed to the panel)

1 **IP30**	Provides a degree of protection against contact with the enclosure equipment and against a limited amount of falling dirt.
2 **IP31**	Provides a degree of protection against limited amounts of falling water and dirt.
3 **IP64**	Provides a degree of protection against windblown dust, rain and sleet; undamaged by the formation of ice on the enclosure.
3R **IP32**	Provides a degree of protection against rain and sleet:; undamaged by the formation of ice on the enclosure.
4 (X) **IP66**	Provides a degree of protection against splashing water, windblown dust and rain, hose directed water; undamaged by the formation of ice on the enclosure. (Resist corrosion).
12/12K **IP65**	Provides a degree of protection against dust, falling dirt and dripping non-corrosive liquids.
13 **IP65**	Provides a degree of protection against dust and spraying of water, oil and non-corrosive coolants.

3 INSTALLATION

The module is designed to be mounted on the panel fascia. For dimension and mounting details, see the section entitled *Dimension and Mounting* elsewhere in this document.

3.1 USER CONNECTIONS

NOTE: Availability of some terminals depends upon module version. Full details are given in the section entitled *Terminal Description* elsewhere in this manual.

To aid user connection, icons are used on the rear of the module to help identify terminal functions. An example of this is shown below.

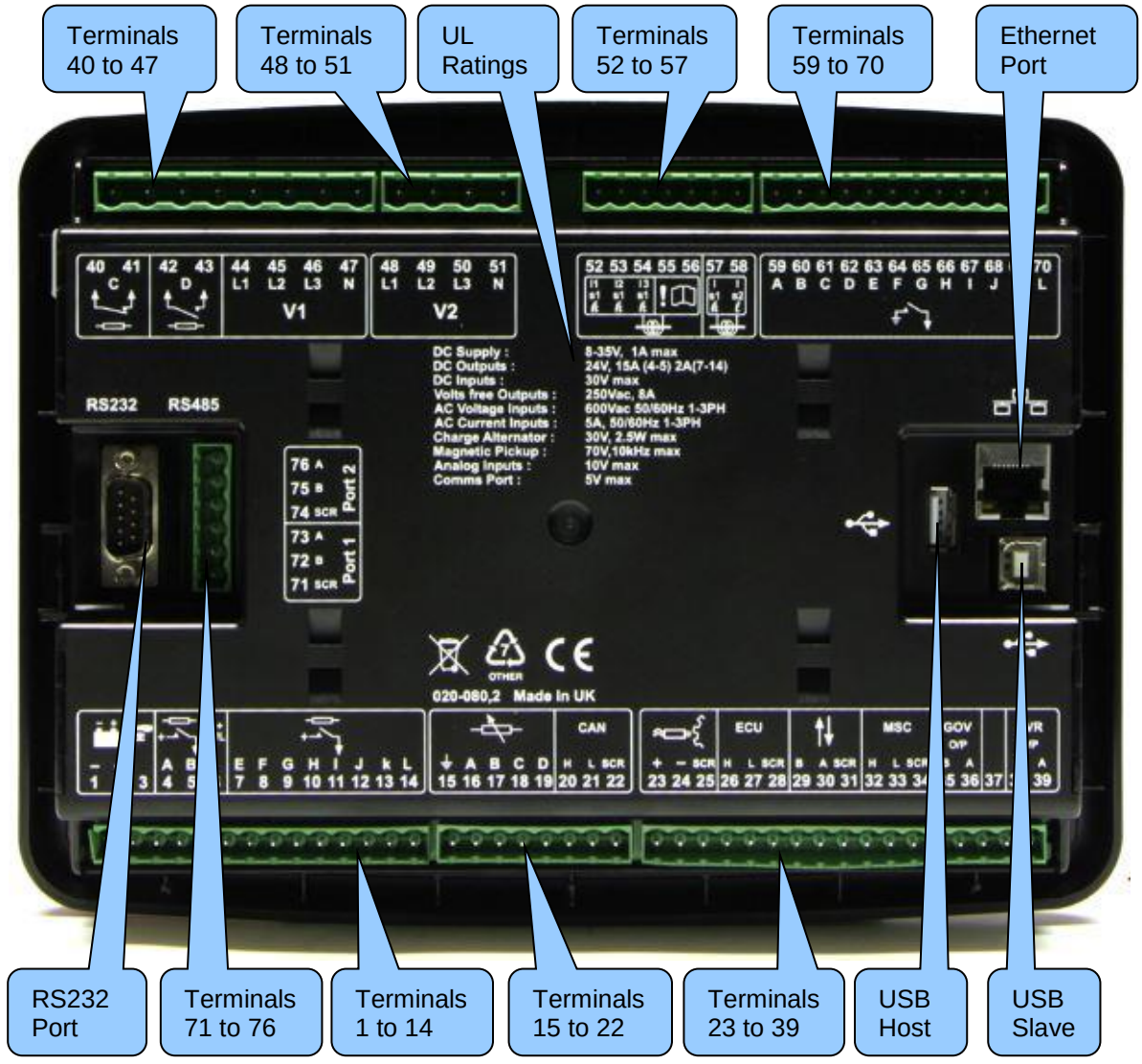

3.2 CONNECTION DESCRIPTIONS

3.2.1 DC SUPPLY, E-STOP INPUT, DC OUTPUTS & CHARGE FAIL INPUT

NOTE: When the module is configured for operation with an electronic engine, *Fuel* and *Start* output requirements may be different. For further details on connection to electronic engines, refer to DSE Publication: *057-004 Electronic Engines And DSE Wiring*

NOTE: For further details of module configuration, refer to DSE Publication: 057-238 *DSE8610 MKII Configuration Suite PC Software Manual.*

	Pin No	Description	Cable Size	Notes
	1	DC Plant Supply Input (Negative)	2.5 mm² AWG 13	Connect to ground where applicable.
	2	DC Plant Supply Input (Positive)	2.5 mm² AWG 13	Supplies the module and DC Outputs E, F, G, H, I & J
	3	Emergency Stop Input	2.5 mm² AWG 13	Plant Supply Positive. Supplies DC Outputs A & B.
	4	DC Output A (FUEL)	2.5 mm² AWG 13	Plant Supply Positive from terminal 3. 15 A DC rated Fixed as fuel relay if electronic engine is not configured.
	5	DC Output B (START)	2.5 mm² AWG 13	Plant Supply Positive from terminal 3. 15 A DC rated Fixed as start relay if electronic engine is not configured.
D+ W/L	6	Charge Fail / Excite	2.5 mm² AWG 13	Do not connect to ground (battery negative). If charge alternator is not fitted, leave this terminal disconnected.
	7	DC Output E	1.0 mm² AWG 18	Plant Supply Positive from terminal 2. 2 A DC rated.
	8	DC Output F	1.0 mm² AWG 18	Plant Supply Positive from terminal 2. 2 A DC rated.
	9	DC Output G	1.0 mm² AWG 18	Plant Supply Positive from terminal 2. 2 A DC rated.
	10	DC Output H	1.0 mm² AWG 18	Plant Supply Positive from terminal 2. 2 A DC rated.
	11	DC Output I	1.0 mm² AWG 18	Plant Supply Positive from terminal 2. 2 A DC rated.
	12	DC Output J	1.0 mm² AWG 18	Plant Supply Positive from terminal 2. 2 A DC rated.
	13	DC Output K	1.0 mm² AWG 18	Plant Supply Positive from terminal 2. 2 A DC rated.
	14	DC Output L	1.0 mm² AWG 18	Plant Supply Positive from terminal 2. 2 A DC rated.

3.2.2 ANALOGUE SENSOR INPUTS & CAN

NOTE: For further details of module configuration, refer to DSE Publication: 057-238 *DSE8610 MKII Configuration Suite PC Software Manual.*

NOTE: It is VERY important that terminal 15 (sensor common) is connected to an earth point on the ENGINE BLOCK, not within the control panel, and must be a sound electrical connection to the sensor bodies. This connection MUST NOT be used to provide an earth connection for other terminals or devices. The simplest way to achieve this is to run a SEPARATE earth connection from the system earth star point, to terminal 15 directly, and not use this earth for other connections.

NOTE: If PTFE insulating tape is used on the sensor thread when using earth return sensors, ensure not to insulate the entire thread, as this prevents the sensor body from being earthed via the engine block.

NOTE: Screened 120 Ω impedance cable specified for use with CAN must be used for the CAN & MSC links.
DSE stock and supply Belden cable 9841 which is a high quality 120 Ω impedance cable suitable for CAN use (DSE part number 016-030)

	Pin No	Description	Cable Size	Notes
	15	Sensor Common Return	0.5 mm² AWG 20	Ground Return Feed For Sensors
	16	Analogue Sensor Input A	0.5 mm² AWG 20	Connect To Oil Pressure Sensor
	17	Analogue Sensor Input B	0.5mm² AWG 20	Connect To Coolant Temperature Sensor
	18	Analogue Sensor Input C	0.5 mm² AWG 20	Connect To Fuel Level Sensor
	19	Analogue Sensor Input D	0.5 mm² AWG 20	Connect To Additional Sensor (User Configurable)
CAN	20	CAN Port H	0.5 mm² AWG 20	Use only 120 Ω CAN or RS485 approved cable
	21	CAN Port L	0.5 mm² AWG 20	Use only 120 Ω CAN or RS485 approved cable
	22	CAN Port Screen	Shield	Use only 120 Ω CAN or RS485 approved cable

3.2.3 MPU, ECU, MSC & DSENET®

NOTE: For further details of module configuration, refer to DSE Publication: 057-238 *DSE8610 MKII Configuration Suite PC Software Manual.*

NOTE: For further details on connection to electronic engines, refer to DSE Publication: *057-004 Electronic Engines And DSE Wiring*

NOTE: Screened 120 Ω impedance cable specified for use with CAN must be used for the CAN & MSC links.
DSE stock and supply Belden cable 9841 which is a high quality 120 Ω impedance cable suitable for CAN use (DSE part number 016-030)

NOTE: As a termination resistor is internally fitted to the controller, the controller must be the 'first' unit on the DSENet® link. A termination resistor MUST be fitted to the 'last' unit on the DSENet® link. For connection details, refer to section entitled *Typical Wiring Diagram* elsewhere in this document.

	Pin No	Description	Cable Size	Notes
	23	Magnetic Pickup Positive	0.5 mm² AWG 20	Connect To Magnetic Pickup Device
	24	Magnetic Pickup Negative	0.5 mm² AWG 20	Connect To Magnetic Pickup Device
	25	Magnetic Pickup Screen	Shield	Connect To Ground At One End Only
ECU	26	ECU Port H	0.5 mm² AWG 20	Use only 120 Ω CAN or RS485 approved cable
	27	ECU Port L	0.5 mm² AWG 20	Use only 120 Ω CAN or RS485 approved cable
	28	ECU Port Screen	Shield	Use only 120 Ω CAN or RS485 approved cable
	29	DSENet® Expansion B	0.5 mm² AWG 20	Use only 120 Ω CAN or RS485 approved cable
	30	DSENet® Expansion A	0.5 mm² AWG 20	Use only 120 Ω CAN or RS485 approved cable
	31	DSENet® Expansion Screen	Shield	Use only 120 Ω CAN or RS485 approved cable
MSC	32	MSC Port H	0.5 mm² AWG 20	Use only 120 Ω CAN or RS485 approved cable
	33	MSC Port L	0.5 mm² AWG 20	Use only 120 Ω CAN or RS485 approved cable
	34	MSC Port Screen	Shield	Use only 120 Ω CAN or RS485 approved cable
GOV	35	Analogue Governor O/P B	0.5mm² AWG 20	Analogue Governor DC Output
	36	Analogue Governor REF A	0.5mm² AWG 20	Analogue Governor Output Reference
		DO NOT CONNECT		DO NOT CONNECT
AVR	38	Analogue AVR O/P B	0.5mm² AWG 20	Analogue AVR DC Output
	39	Analogue AVR REF A	0.5mm² AWG 20	Analogue AVR Output Reference

3.2.4 OUTPUT C & D, & V1 (GENERATOR) VOLTAGE & FREQUENCY SENSING

NOTE: The below table describes connections to a three phase, four wire alternators. For alternative wiring topologies, see the section entitled *Alternate Topology Wiring Diagrams* elsewhere in this document.

	Pin No	Description	Cable Size	Notes
	40	Normally Closed Volt-Free Relay Output C	1.0mm² AWG 18	Normally configured to open the generator contactor coil
	41		1.0mm² AWG 18	
	42	Normally Open Volt-Free Relay Output D	1.0mm² AWG 18	Normally configured to close the generator contactor coil
	43		1.0mm² AWG 18	
V1	44	Generator L1 (U) Voltage Sensing	1.0 mm² AWG 18	Connect to generator L1 (U) output (AC) (Recommend 2 A fuse)
	45	Generator L2 (V) Voltage Sensing	1.0 mm² AWG 18	Connect to generator L2 (V) output (AC) (Recommend 2 A fuse)
	46	Generator L3 (W) Voltage Sensing	1.0 mm² AWG 18	Connect to generator L3 (W) output (AC) (Recommend 2 A fuse)
	47	Generator Neutral (N) Input	1.0 mm² AWG 18	Connect to generator Neutral terminal (AC)

3.2.5 V2 (BUS) VOLTAGE & FREQUENCY SENSING

NOTE: The below table describes connections to a three phase, four wire Bus supply. For alternative wiring topologies, see the section entitled *Alternate Topology Wiring Diagrams* elsewhere in this document.

	Pin No	Description	Cable Size	Notes
V2	48	Bus L1 (R) Voltage Sensing	1.0 mm² AWG 18	Connect to Bus L1 (R) output (AC) (Recommend 2 A fuse)
	49	Bus L2 (S) Voltage Sensing	1.0 mm² AWG 18	Connect to Bus L2 (S) output (AC) (Recommend 2 A fuse)
	50	Bus L3 (T) Voltage Sensing	1.0 mm² AWG 18	Connect to Bus L3 (T) output (AC) (Recommend 2 A fuse)
	51	Bus Neutral (N) Input	1.0 mm² AWG 18	Connect to Bus Neutral terminal (AC)

3.2.6 CURRENT TRANSFORMERS

WARNING!: Do not disconnect this plug when the CTs are carrying current. Disconnection open circuits the secondary of the C.T.'s and dangerous voltages may then develop. Always ensure the CTs are not carrying current and the CTs are short circuit connected before making or breaking connections to the module.

NOTE: The module has a burden of 0.25 VA on the CT. Ensure the CT is rated for the burden of the controller, the cable length being used and any other equipment sharing the CT. If in doubt, consult with the CT supplier.

NOTE: Take care to ensure correct polarity of the CT primary as shown below. If in doubt, consult with the CT supplier.

NOTE: Terminals 57 & 58 are not fitted, do not connect.

	Pin No	Description	Cable Size	Notes
	52	CT Secondary for L1	2.5 mm² AWG 13	Connect to s1 secondary of L1 monitoring CT
	53	CT Secondary for L2	2.5 mm² AWG 13	Connect to s1 secondary of L2 monitoring CT
	54	CT Secondary for L3	2.5 mm² AWG 13	Connect to s1 secondary of L3 monitoring CT

NOTE: The function of terminals 55 and 56 changes depending upon what type of earth fault protection (if any) is being used:

	Topology	Pin No	Notes	Cable Size
	No earth fault measuring	55	DO NOT CONNECT	
		56	Connect to s2 of the CTs connected to L1, L2 and L3	2.5mm² AWG 13
	Restricted earth fault measuring	55	Connect to s2 of the CTs connected to L1, L2, L3 and N	2.5mm² AWG 13
		56	Connect to s1 of the CT on the neutral conductor	2.5mm² AWG 13
	Un-restricted earth fault measuring (Earth fault CT is fitted in the neutral to earth link)	55	Connect to s1 of the CT on the neutral to earth link.	2.5mm² AWG 13
		56	Connect to s2 of the CT on the neutral to earth link. Also connect to the s2 of CTs connected to L1, L2 and L3.	2.5mm² AWG 13

3.2.6.1 CT CONNECTIONS

p1, k or K is the primary of the CT that 'points' towards the Generator

p2, l or L is the primary of the CT that 'points' towards the Load

s1 is the secondary of the CT that connects to the DSE Module's input for the CT measuring

s2 is the secondary of the CT that should be common with the s2 connections of all the other CTs and connected to the CT common terminal of the module.

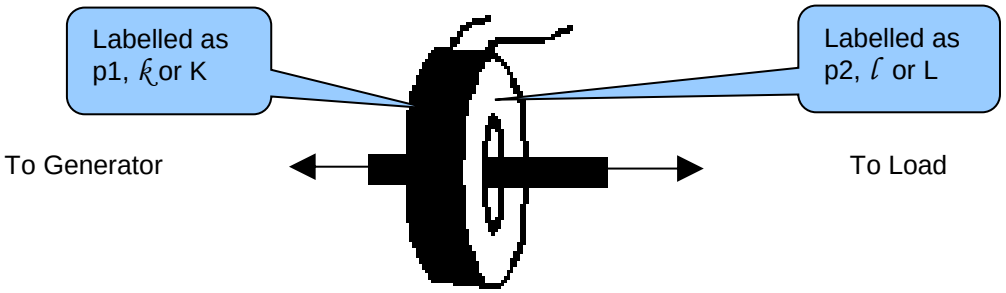

Polarity of CT Primary

3.2.7 DIGITAL INPUTS

NOTE: For further details of module configuration, refer to DSE Publication: 057-238 *DSE8610 MKII Configuration Suite PC Software Manual.*

	Pin No	Description	Cable Size	Notes
	59	Configurable Digital Input A	0.5 mm² AWG 20	Switch To Negative
	60	Configurable Digital Input B	0.5 mm² AWG 20	Switch To Negative
	61	Configurable Digital Input C	0.5 mm² AWG 20	Switch To Negative
	62	Configurable Digital Input D	0.5 mm² AWG 20	Switch To Negative
	63	Configurable Digital Input E	0.5 mm² AWG 20	Switch To Negative
	64	Configurable Digital Input F	0.5 mm² AWG 20	Switch To Negative
	65	Configurable Digital Input G	0.5 mm² AWG 20	Switch To Negative
	66	Configurable Digital Input H	0.5 mm² AWG 20	Switch To Negative
	67	Configurable Digital Input I	0.5 mm² AWG 20	Switch To Negative
	68	Configurable Digital Input J	0.5 mm² AWG 20	Switch To Negative
	69	Configurable Digital Input K	0.5 mm² AWG 20	Switch To Negative
	70	Configurable Digital Input L	0.5 mm² AWG 20	Switch To Negative

3.2.8 RS485

NOTE: For further details of module configuration, refer to DSE Publication: 057-238 *DSE8610 MKII Configuration Suite PC Software Manual.*

NOTE: A 120 Ω termination resistor must be fitted across terminals A and B if the DSE module is the first or last device on the R485 link.

NOTE: Screened 120 Ω impedance cable specified for use with RS485 must be used for the RS485 link.
DSE stock and supply Belden cable 9841 which is a high quality 120 Ω impedance cable suitable for CAN use (DSE part number 016-030)

NOTE: Only the first RS485 port is currently enabled.

	Pin No	Description	Cable Size	Notes
RS485 1	71	RS485 Port Screen	Shield	Use only 120 Ω CAN or RS485 approved cable
	72	RS485 Port B (+)	0.5 mm² AWG 20	Connect to RXD+ and TXD+ Use only 120 Ω CAN or RS485 approved cable
	73	RS485 Port A (-)	0.5 mm² AWG 20	Connect to RXD- and TXD- Use only 120 Ω CAN or RS485 approved cable
RS485 2	74	RS485 Port Screen	Shield	Use only 120 Ω CAN or RS485 approved cable
	75	RS485 Port B (+)	0.5 mm² AWG 20	Connect to RXD+ and TXD+ Use only 120 Ω CAN or RS485 approved cable
	76	RS485 Port A (-)	0.5 mm² AWG 20	Connect to RXD- and TXD- Use only 120 Ω CAN or RS485 approved cable

3.2.9 RS232

NOTE: For further details of module configuration, refer to DSE Publication: 057-238 *DSE8610 MKII Configuration Suite PC Software Manual.*

NOTE: Connecting a modem directly to the module's RS232 is for legacy support only. When a new installation requires remote communication using the cellular network, refer to DSE products DSE890, DSE891 and DSEWebNet on the DSE website: www.deepseaelectronics.com.

	Description	Notes
	Socket for connection to a modem or PC with DSE Configuration Suite Software	Supports MODBUS RTU protocol or external modem

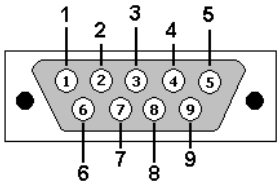

View looking into the male connector on the module

PIN No	Notes
1	Received Line Signal Detector (Data Carrier Detect)
2	Received Data
3	Transmit Data
4	Data Terminal Ready
5	Signal Ground
6	Data Set Ready
7	Request To Send
8	Clear To Send
9	Ring Indicator

3.2.10 USB SLAVE (PC CONFIGURATION) CONNECTOR

NOTE: The USB connection cable between the PC and the module must not be extended beyond 5 m (16 feet). For distances over 5 m, it is possible to use a third-party USB extender. Typically, they extend USB up to 50 m. The supply and support of this type of equipment is outside the scope of Deep Sea Electronics PLC.

CAUTION!: Care must be taken not to overload the PCs USB system by connecting more than the recommended number of USB devices to the PC. For further information, consult your PC supplier.

NOTE: For further details of module configuration, refer to DSE Publication: 057-238 *DSE8610 MKII Configuration Suite PC Software Manual.*

	Description	Cable Size	Notes
	Socket for connection to PC with DSE Configuration Suite Software	0.5 mm² AWG 20	This is a standard USB type A to type B connector. 

3.2.11 USB HOST (DATA LOGGING) CONNECTOR

NOTE: For further details of module configuration, refer to DSE Publication: 057-238 *DSE8610 MKII Configuration Suite PC Software Manual.*

NOTE: For further details on how to add and remove a USB storage device, refer to section entitled *Data Logging Pages* elsewhere in this document.

	Description	Storage Size	Notes
	Socket for connection to USB storage device for data logging	Maximum 16 GB	USB storage device must be formatted as FAT32.

3.3 TYPICAL WIRING DIAGRAM

As every system has different requirements, these diagrams show only a typical system and do not intend to show a complete system.

Genset manufacturers and panel builders may use these diagrams as a starting point; however always refer to the completed system diagram provided by the system manufacturer for complete wiring detail.

Further wiring suggestions are available in the following DSE publications, available at www.deepseaelectronics.com to website members.

DSE Part	Description
056-022	Breaker Control (Training guide)
056-005	Using CTs With DSE Products
056-022	Breaker Control
056-091	Equipotential Earth Bonding
056-092	Best Practices for Wiring Resistive Sensors

3.3.1 3 PHASE 4 WIRE WITH RESTRICTED EARTH FAULT

NOTE: The below diagram is applicable for the following AC topologies: 3 Phase 4 Wire Star, 3 Phase 4 Wire Delta L1-N-L2, 3 Phase 4 Wire Delta L1-N-L3 and 3 Phase 4 Wire Delta *L2-N-L3*. For further details of module configuration to suit these different topologies, refer to DSE Publication: *057-238 DSE8610 MKII Configuration Suite PC Software Manual.*

NOTE: Earthing the neutral conductor 'before' the neutral CT allows the module to read earth faults 'after' the CT only (Restricted to load / downstream of the CT)
Earthing the neutral conductor 'after' the neutral CT allows the module to read earth faults 'before' the CT only (Restricted to generator / upstream of the CT)

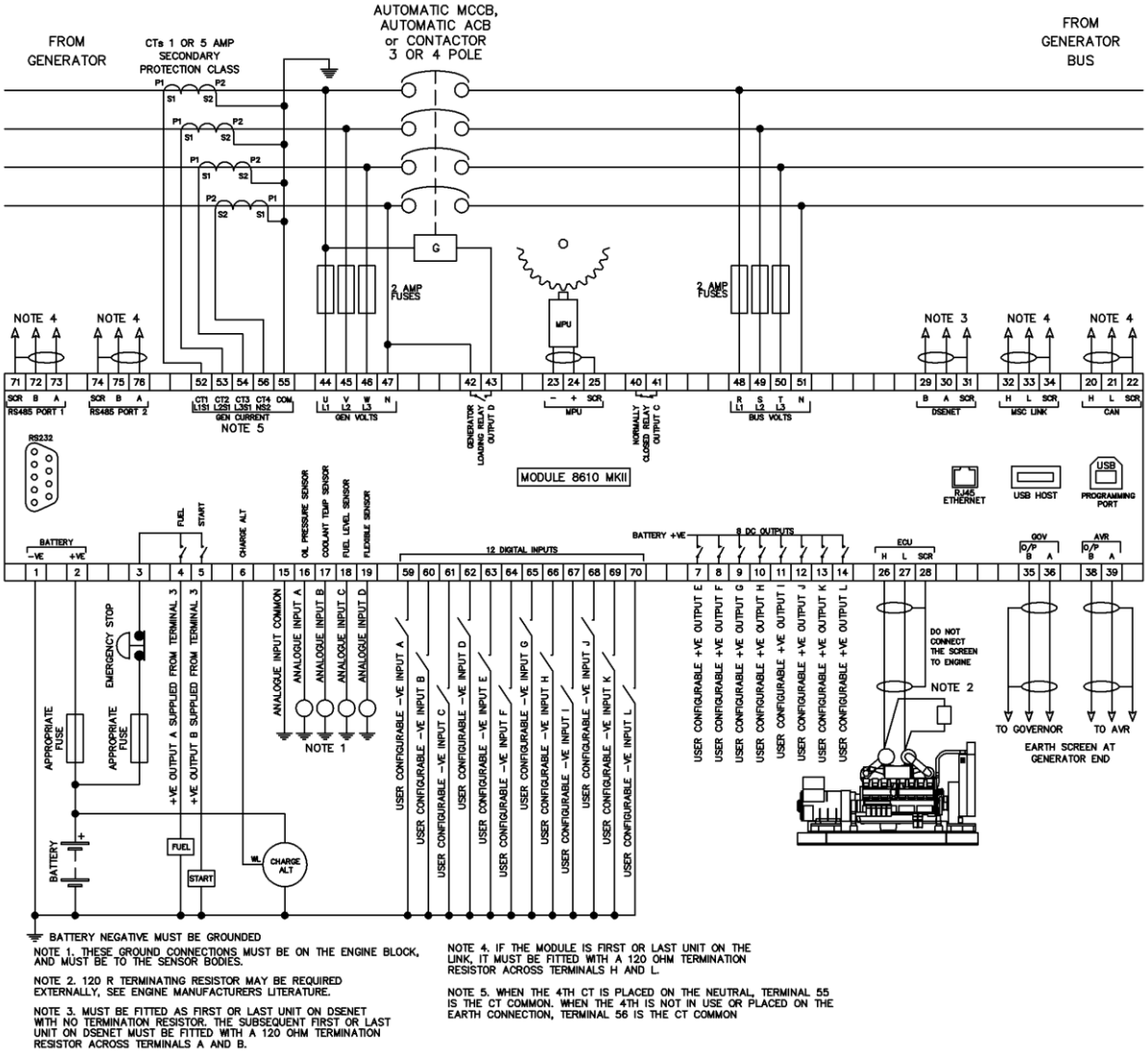

3.3.2 EARTH SYSTEMS

3.3.2.1 NEGATIVE EARTH

The typical wiring diagrams located within this document show connections for a negative earth system (the battery negative connects to Earth).

3.3.2.2 POSITIVE EARTH

When using a DSE module with a Positive Earth System (the battery positive connects to Earth), the following points must be followed:

Follow the typical wiring diagram as normal for all sections ***except*** the earth points.
All points shown as Earth on the typical wiring diagram should connect to ***battery negative*** (not earth).

3.3.2.3 FLOATING EARTH

Where neither the battery positive nor battery negative terminals are connected to earth the following points must to be followed:

Follow the typical wiring diagram as normal for all sections ***except*** the earth points.
All points shown as Earth on the typical wiring diagram should connect to ***battery negative*** (not earth).

3.3.3 TYPICAL ARRANGEMENT OF DSENET®

NOTE: For further details of module configuration, refer to DSE Publication: 057-238 *DSE8610 MKII Configuration Suite PC Software Manual.*

NOTE: This feature is not available if the DSE86xx MKII module has been configured to use the DSENet® port as the interface to a Cummins MODBUS GCS ECU.

NOTE: Screened 120 Ω impedance cable specified for use with CAN must be used for the DSENet® (RS485) connection.

DSE stock and supply Belden cable 9841 which is a high quality 120Ω impedance cable suitable for DSENet® use (DSE part number 016-030)

Twenty (20) devices can be connected to the DSENet®, made up of the following devices :

Device	Maximum Number Supported
DSE2130 Input Expansion	4
DSE2131 Input Expansion	4
DSE2133 Input Expansion	4
DSE2152 Relay Output Expansion	4
DSE2157 Relay Output Expansion	10
DSE2548 LED Expansion	10
DSE Intelligent Battery Chargers	4

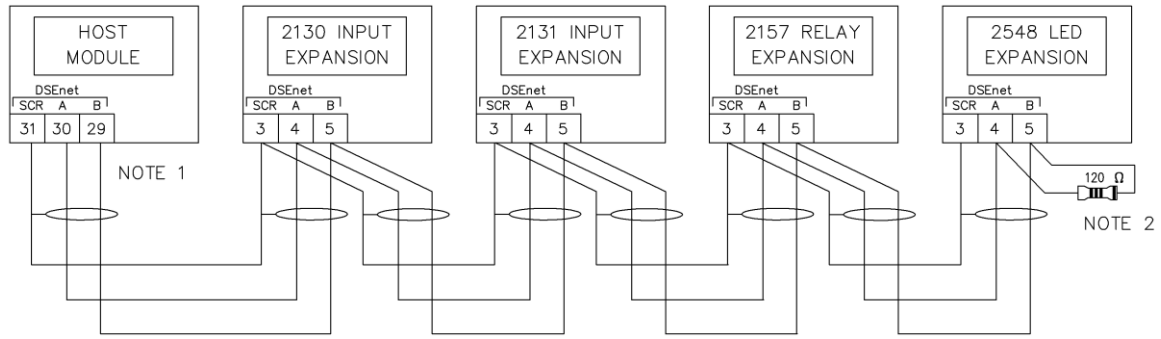

NOTE 1

AS A TERMINATING RESISTOR IS INTERNALLY FITTED TO THE HOST CONTROLLER, THE HOST CONTROLLER MUST BE THE FIRST UNIT ON THE DSEnet

NOTE 2

A 120 OHM TERMINATION RESISTOR MUST BE FITTED TO THE LAST UNIT ON THE DSEnet

3.3.4 TYPICAL ARRANGEMENT OF MSC LINK

NOTE: For further information on the maximum number of modules that can be connected to the MSC link and Redundant MSC link, refer to sections entitled *MSC (Multi-Set Communications) Link* and *CAN Port (Redundant MSC)* elsewhere in this document.

NOTE: For further details of module configuration, refer to DSE Publication: 057-238 *DSE8610 MKII Configuration Suite PC Software Manual.*

NOTE: Screened 120 Ω impedance cable specified for use with CAN must be used for the DSENet® (RS485) connection.

DSE stock and supply Belden cable 9841 which is a high quality 120 Ω impedance cable suitable for DSENet® use (DSE part number 016-030)

NOTE: A termination resistor MUST be fitted to the first and last unit on the MSC link.

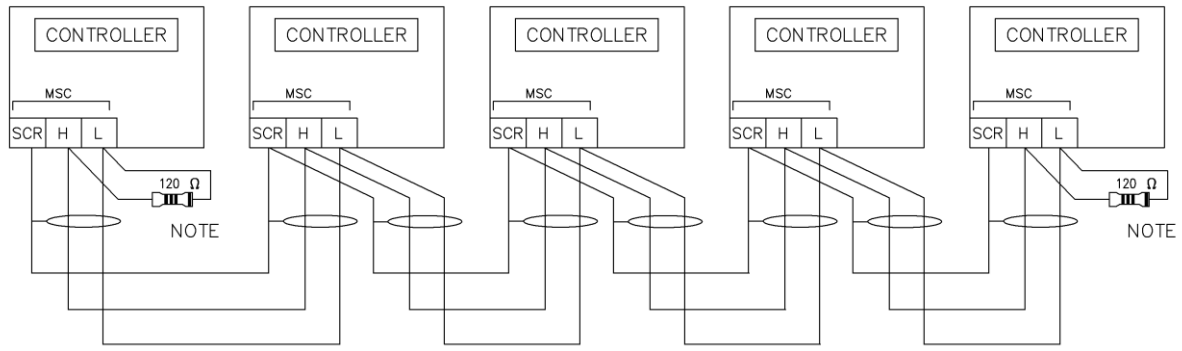

NOTE
A 120 OHM TERMINATION RESISTOR MUST BE FITTED TO THE FIRST AND LAST UNIT ON THE MSC LINK

3.4 ALTERNATE TOPOLOGY WIRING DIAGRAMS

3.4.1 SINGLE PHASE (L1 & N) 2 WIRE WITH RESTRICTED EARTH FAULT

NOTE: Earthing the neutral conductor 'before' the neutral CT allows the module to read earth faults 'after' the CT only (Restricted to load / downstream of the CT)
Earthing the neutral conductor 'after' the neutral CT allows the module to read earth faults 'before' the CT only (Restricted to generator / upstream of the CT)

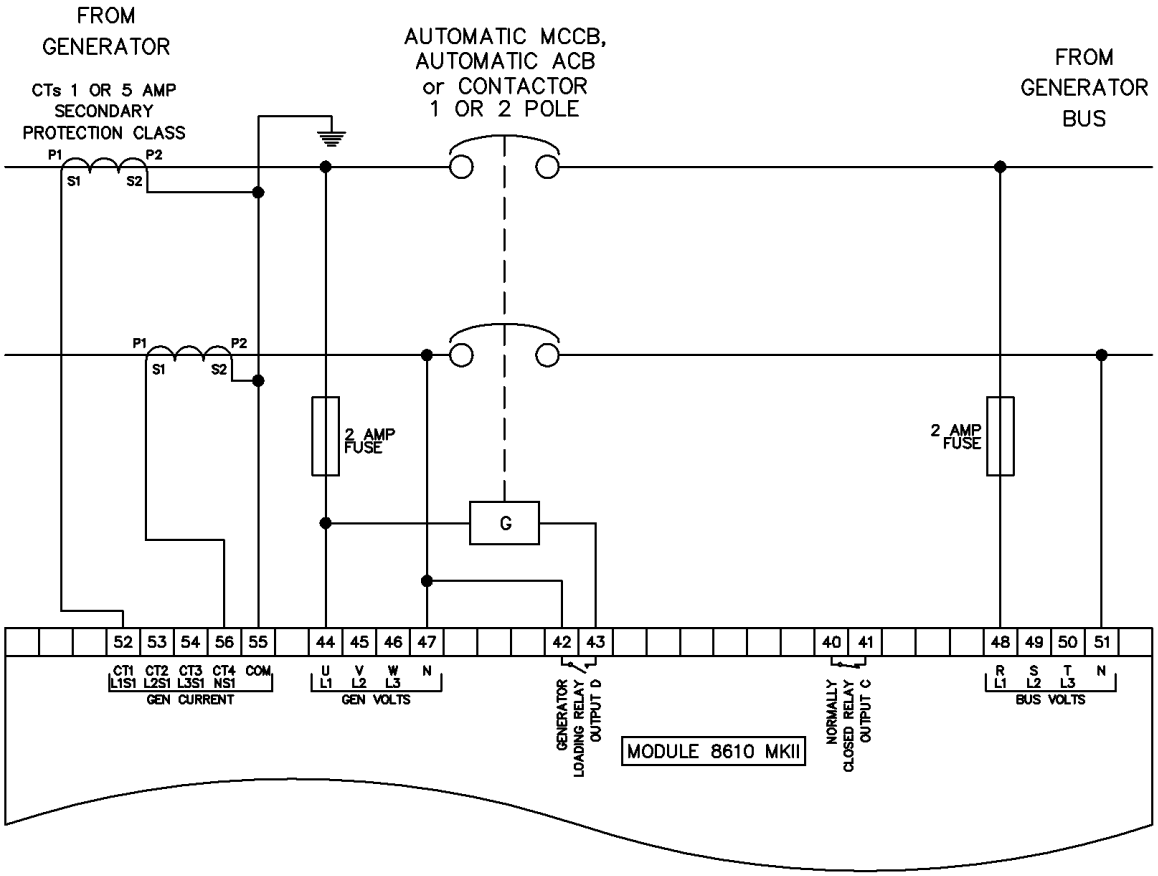

3.4.2 SINGLE PHASE (L1 & N) 2 WIRE WITHOUT EARTH FAULT

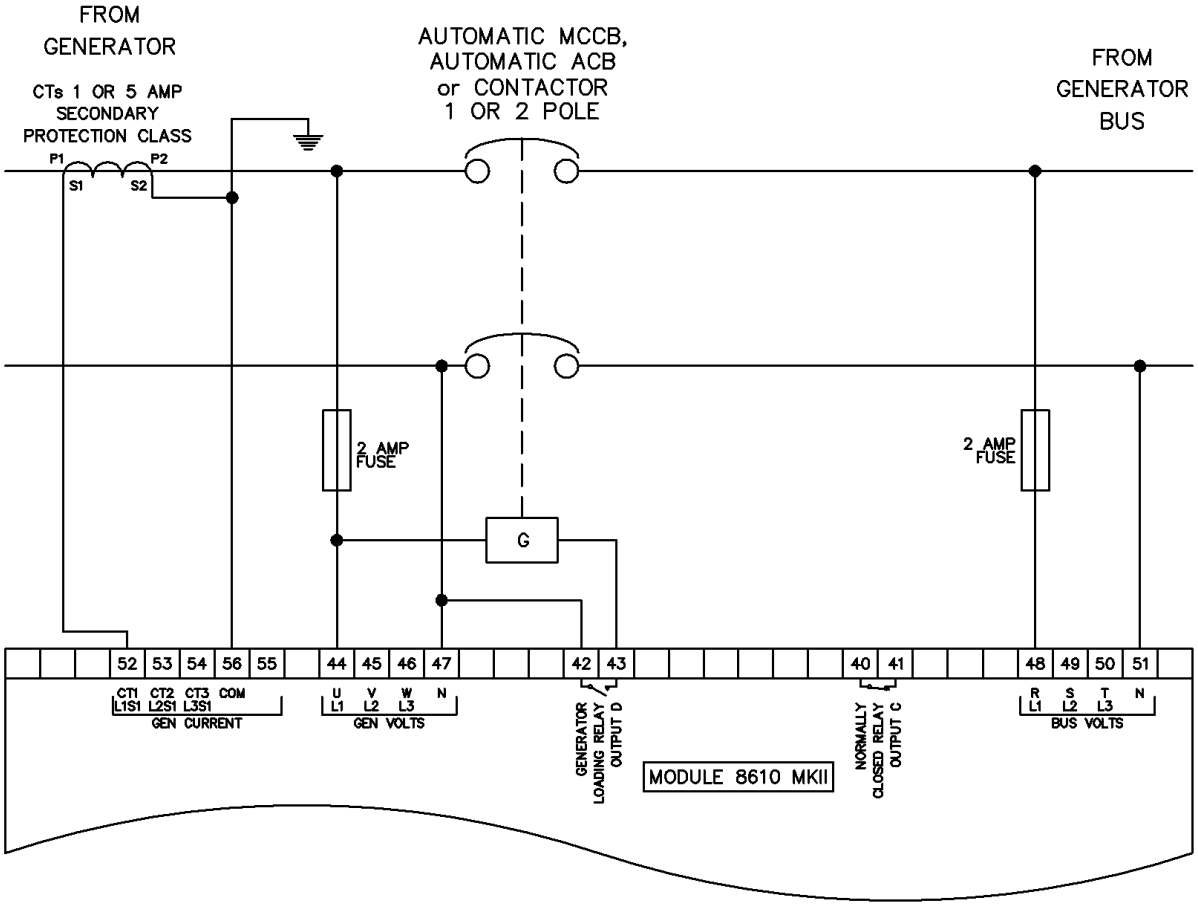

3.4.3 SINGLE PHASE (L1 & L2) 3 WIRE WITH RESTRICTED EARTH FAULT

NOTE: Earthing the neutral conductor 'before' the neutral CT allows the module to read earth faults 'after' the CT only (Restricted to load / downstream of the CT)
Earthing the neutral conductor 'after' the neutral CT allows the module to read earth faults 'before' the CT only (Restricted to generator / upstream of the CT)

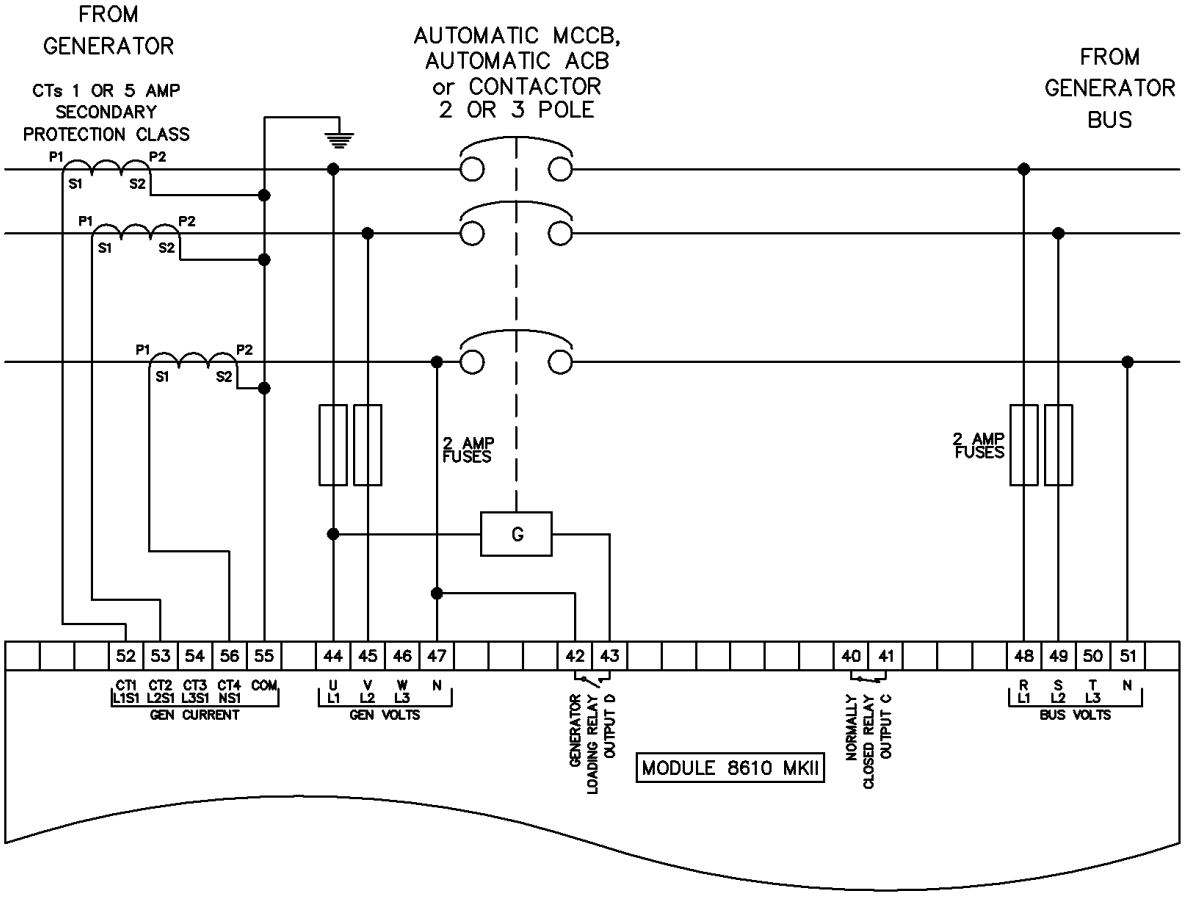

3.4.4 SINGLE PHASE (L1 & L2) 3 WIRE WITHOUT EARTH FAULT

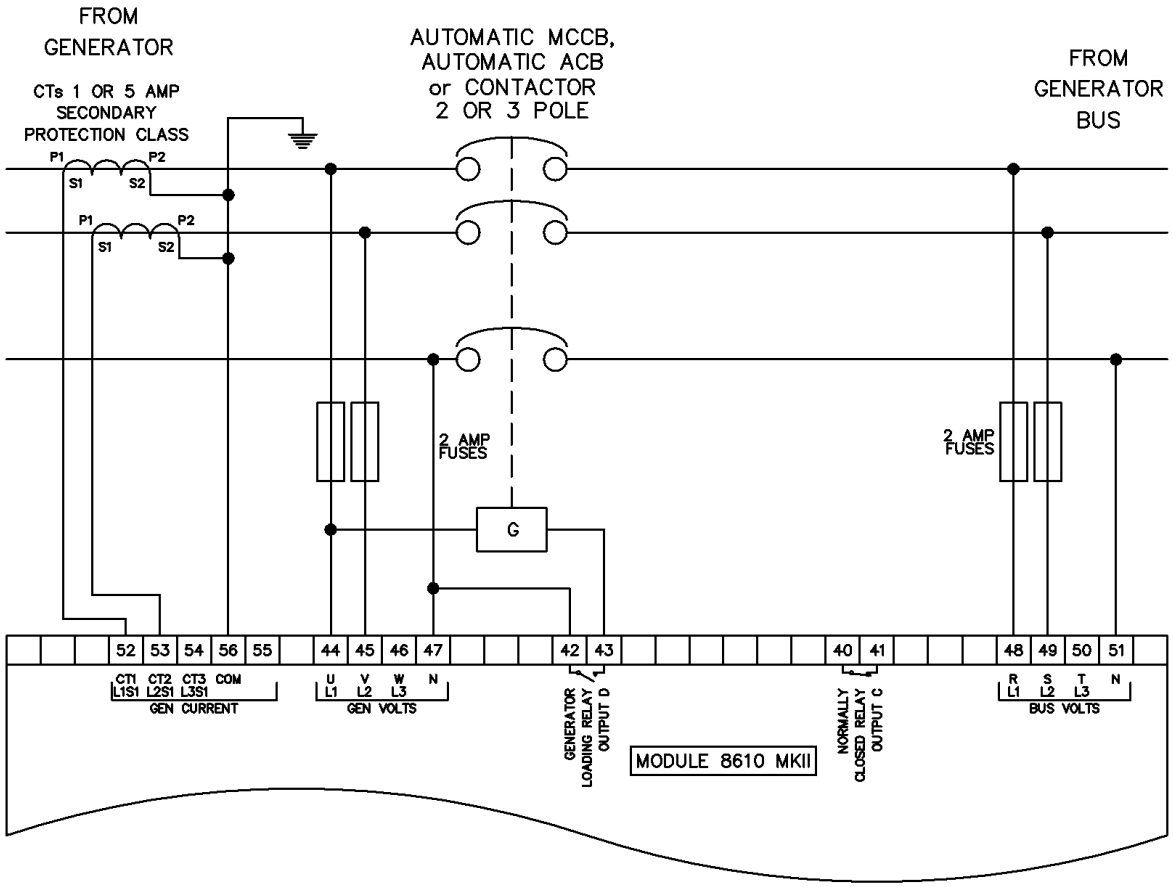

3.4.5 SINGLE PHASE (L1 & L3) 3 WIRE WITH RESTRICTED EARTH FAULT

NOTE: Earthing the neutral conductor 'before' the neutral CT allows the module to read earth faults 'after' the CT only (Restricted to load / downstream of the CT)
Earthing the neutral conductor 'after' the neutral CT allows the module to read earth faults 'before' the CT only (Restricted to generator / upstream of the CT)

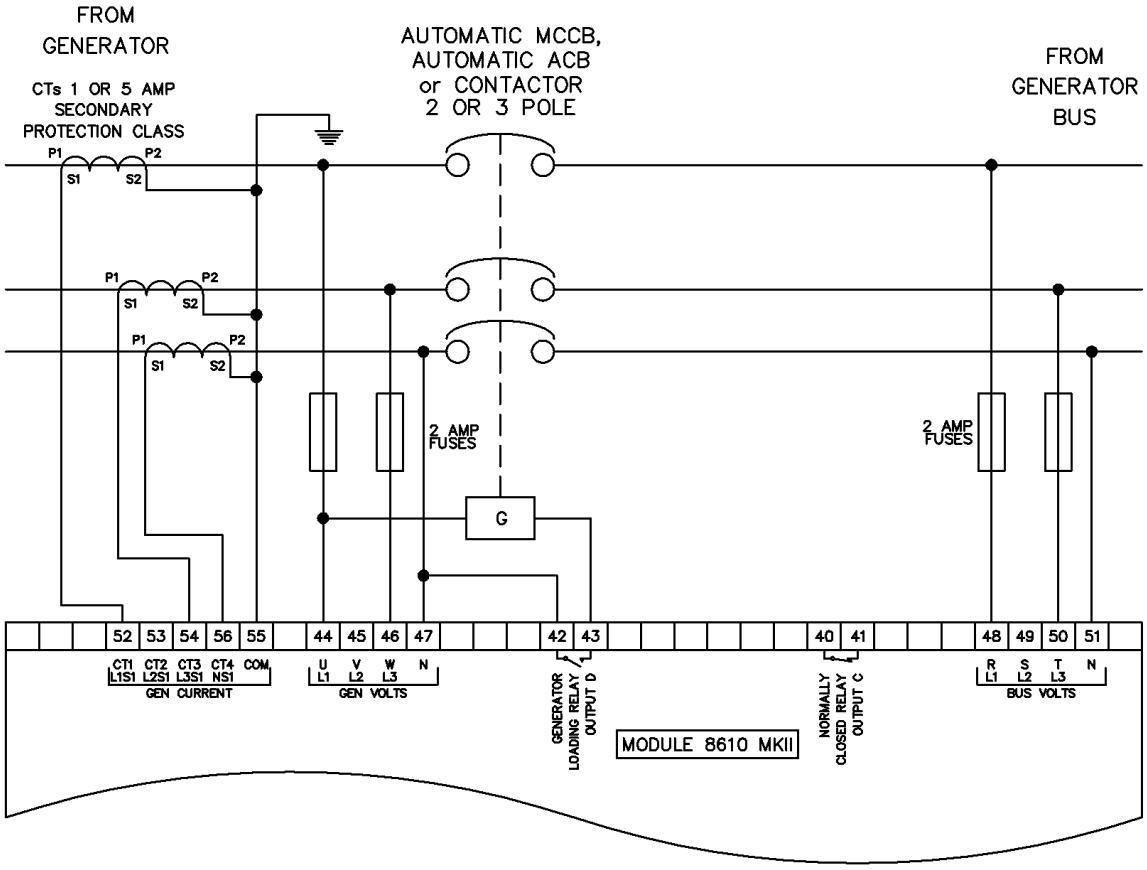

3.4.6 SINGLE PHASE (L1 & L3) 3 WIRE WITHOUT EARTH FAULT

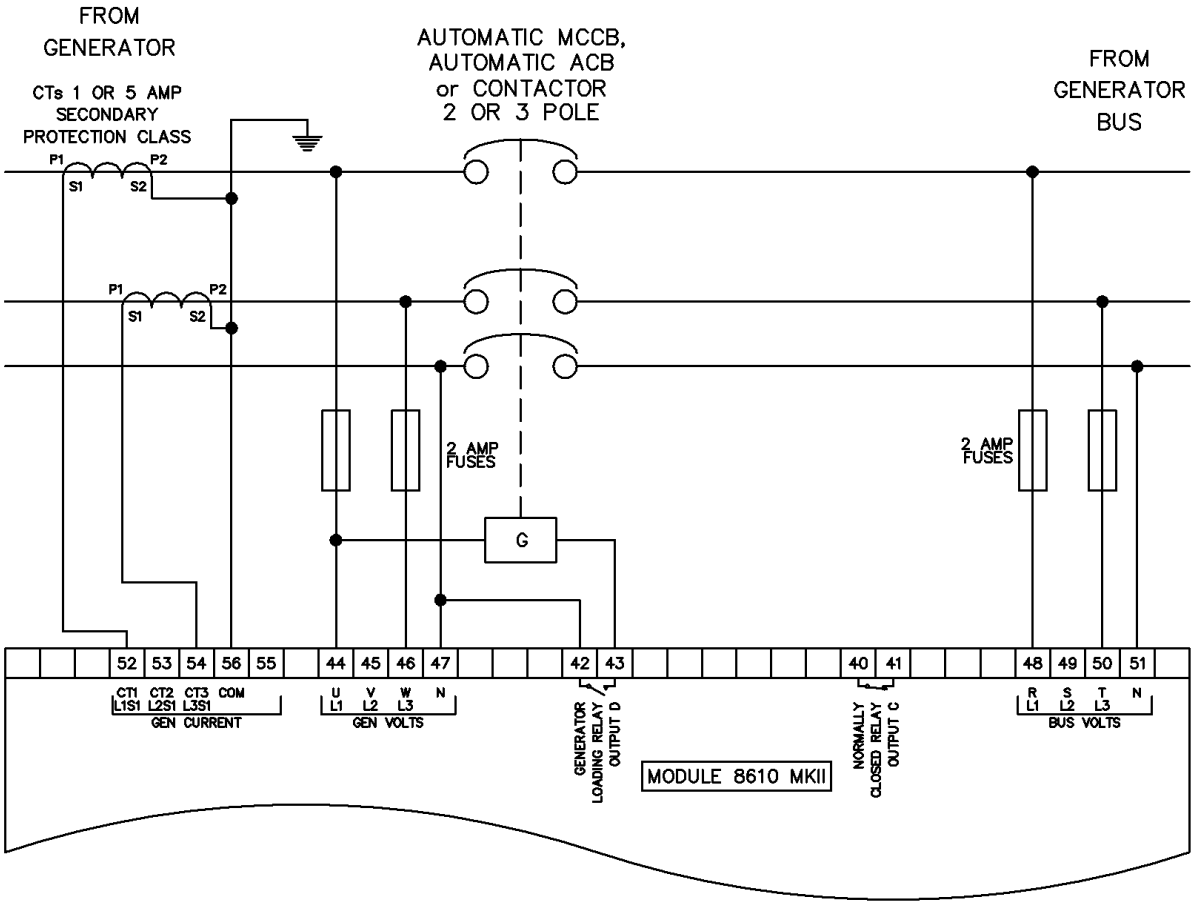

3.4.7 2 PHASE (L1 & L2) 3 WIRE WITH RESTRICTED EARTH FAULT

NOTE: Earthing the neutral conductor 'before' the neutral CT allows the module to read earth faults 'after' the CT only (Restricted to load / downstream of the CT)
Earthing the neutral conductor 'after' the neutral CT allows the module to read earth faults 'before' the CT only (Restricted to generator / upstream of the CT)

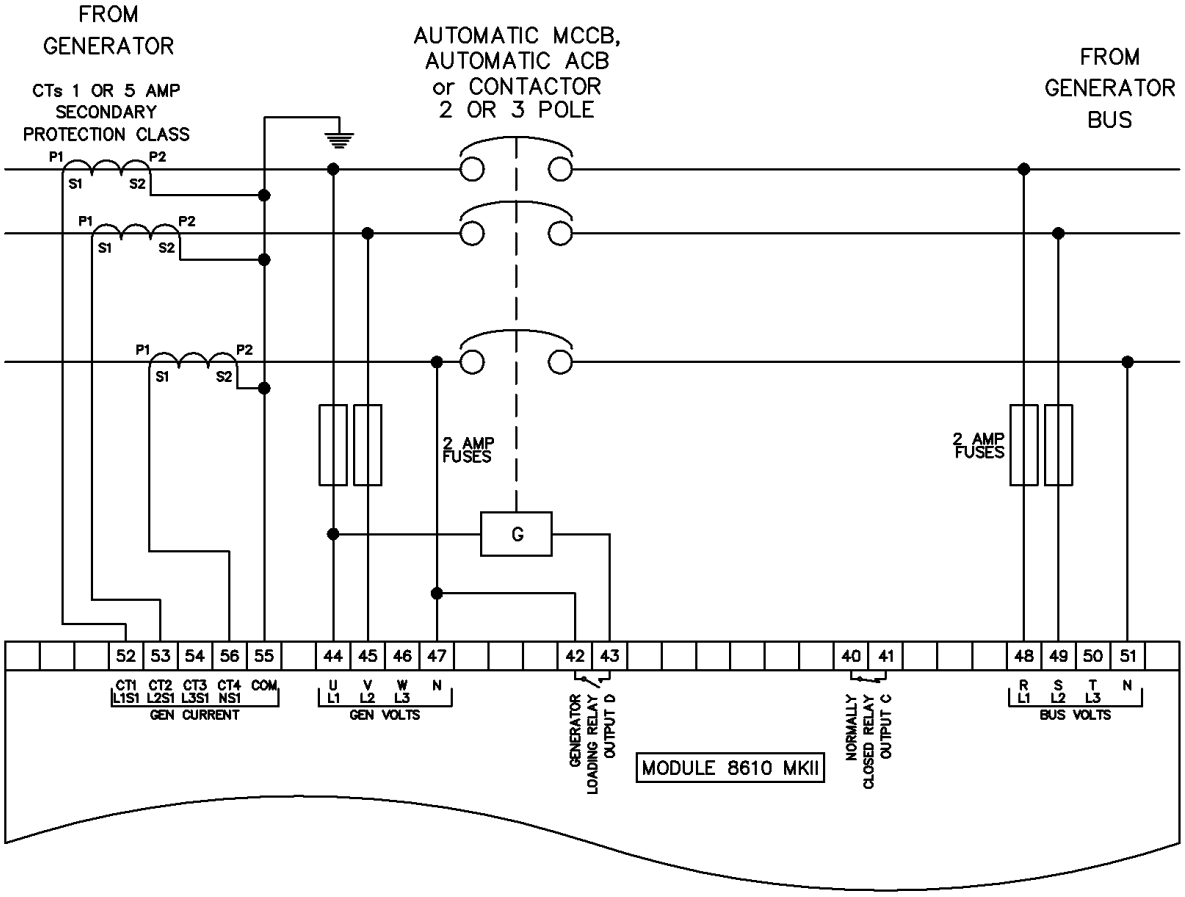

3.4.8 2 PHASE (L1 & L2) 3 WIRE WITHOUT EARTH FAULT

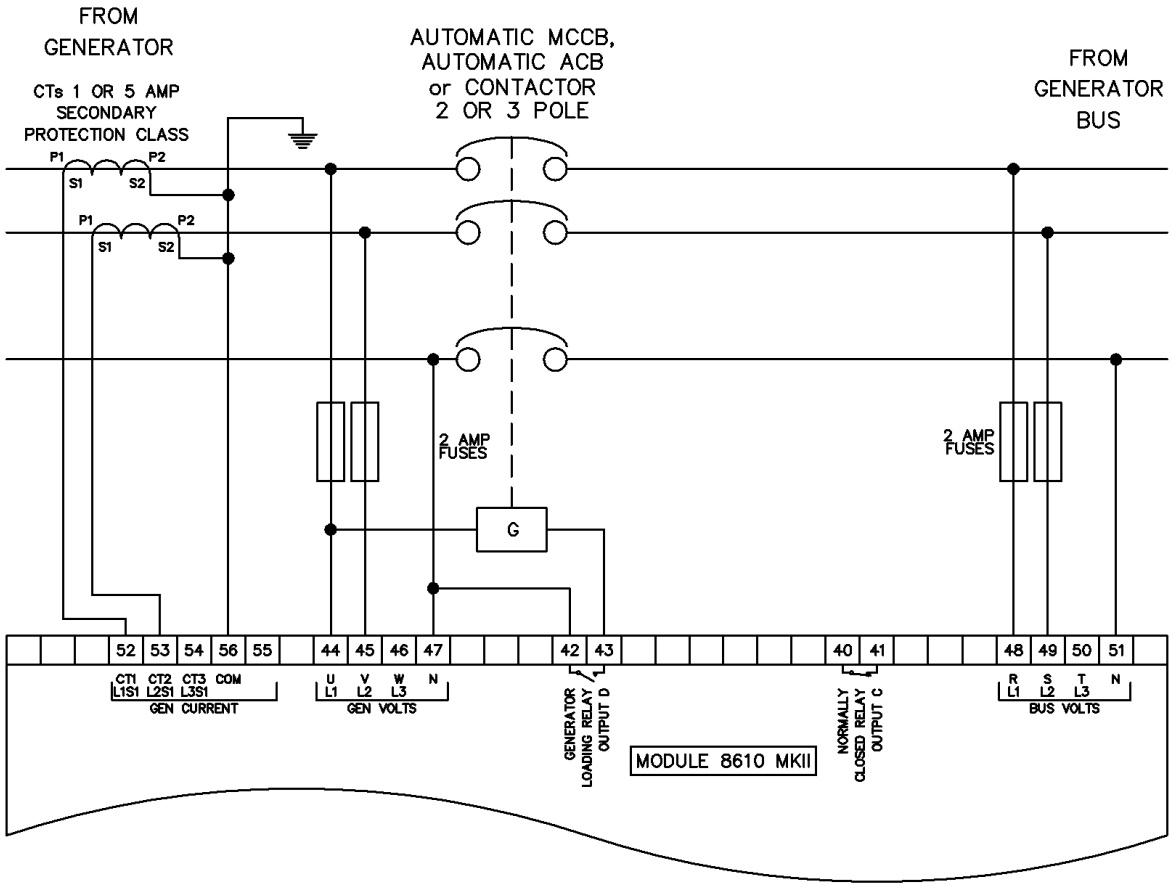

3.4.9 2 PHASE (L1 & L3) 3 WIRE WITH RESTRICTED EARTH FAULT

NOTE: Earthing the neutral conductor 'before' the neutral CT allows the module to read earth faults 'after' the CT only (Restricted to load / downstream of the CT)
Earthing the neutral conductor 'after' the neutral CT allows the module to read earth faults 'before' the CT only (Restricted to generator / upstream of the CT)

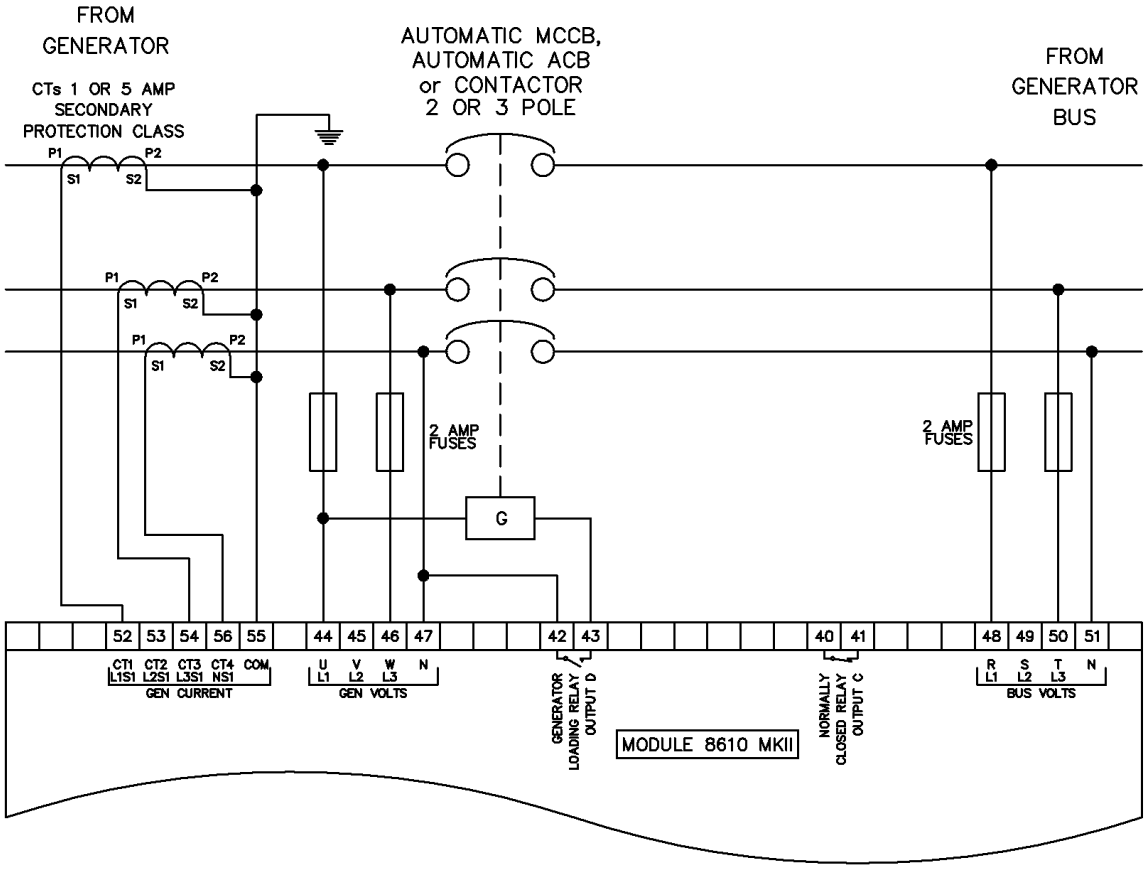

3.4.10 2 PHASE (L1 & L3) 3 WIRE WITHOUT EARTH FAULT

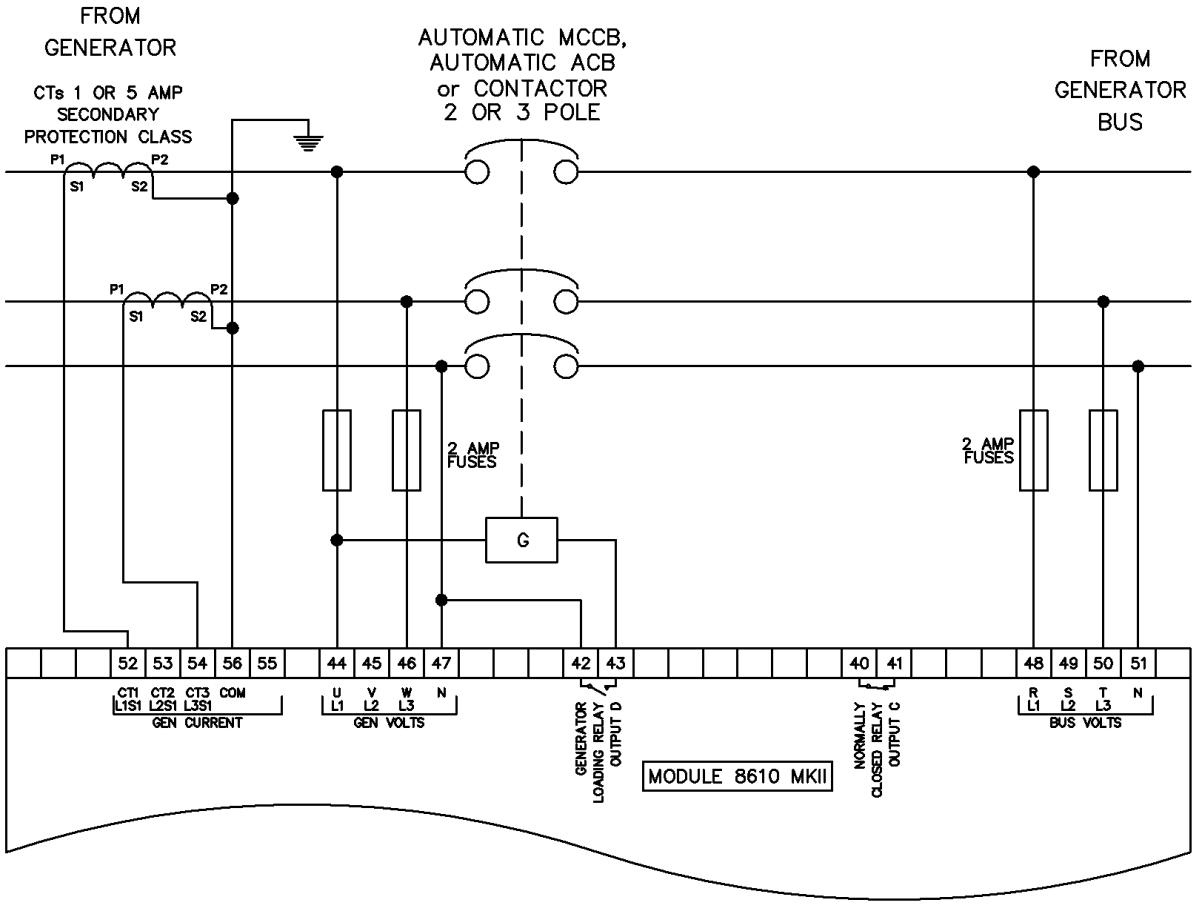

3.4.11 3 PHASE 3 WIRE DETLA WITHOUT EARTH FAULT

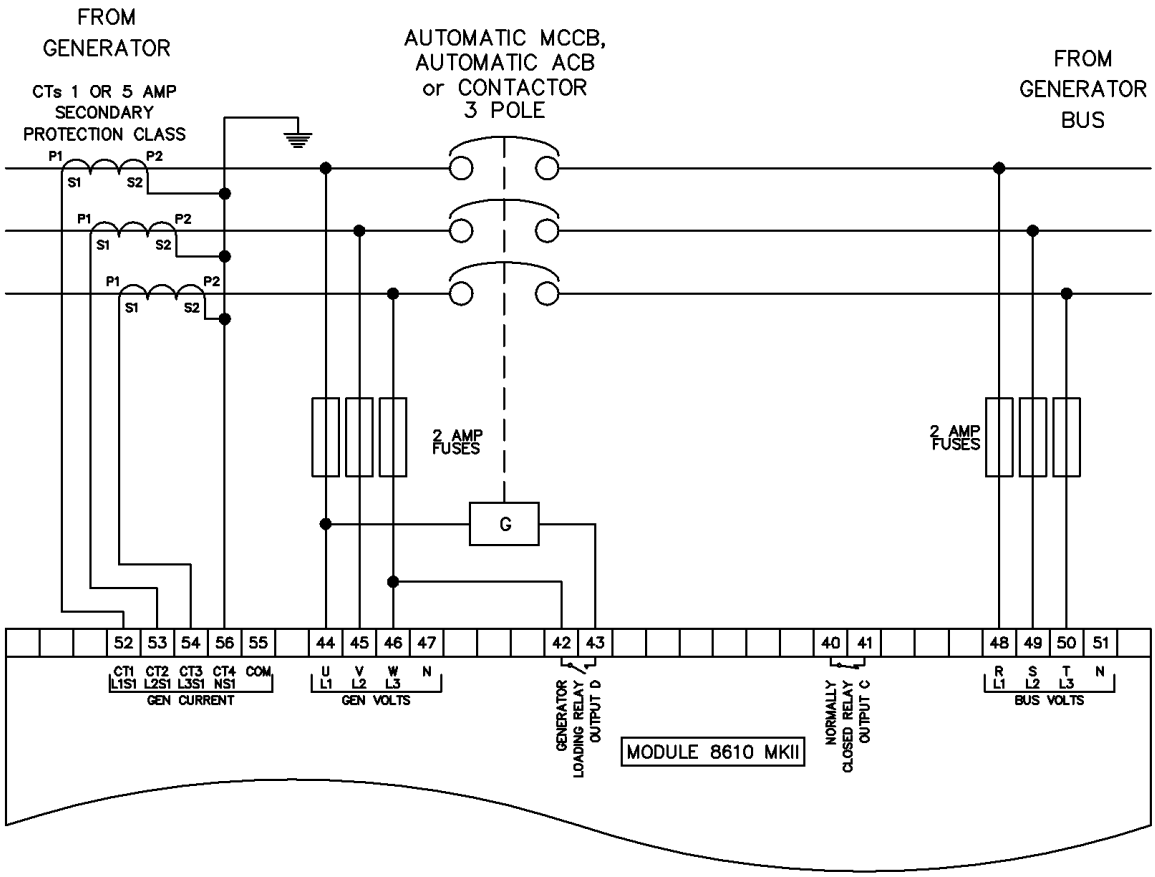

3.4.12 3 PHASE 4 WIRE WITHOUT EARTH FAULT

NOTE: The below diagram is applicable for the following AC topologies: 3 Phase 4 Wire Star, 3 Phase 4 Wire Delta L1-N-L2, 3 Phase 4 Wire Delta L1-N-L3 and 3 Phase 4 Wire Delta *L2-N-L3*. For further details of module configuration to suit these different topologies, refer to DSE Publication: *057-238 DSE8610 MKII Configuration Suite PC Software Manual.*

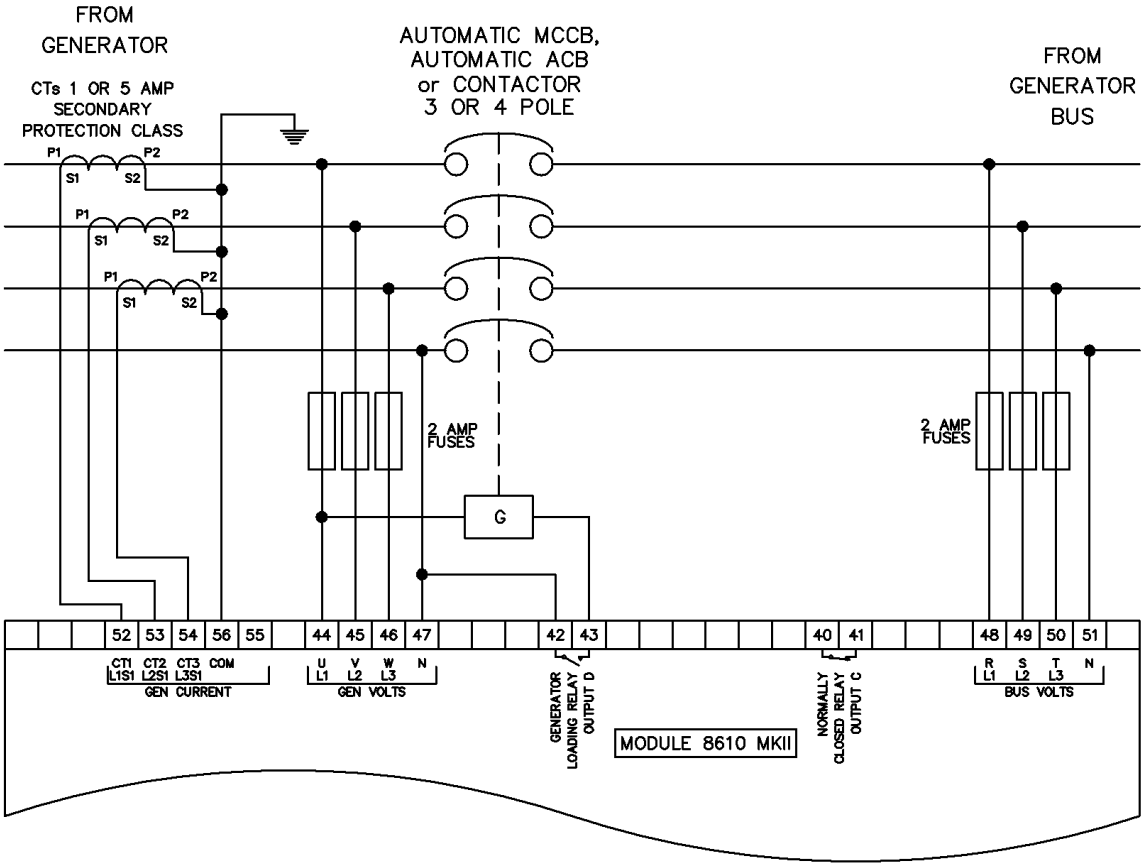

3.4.13 3 PHASE 4 WIRE WITH RESTRICTED EARTH FAULT

NOTE: The below diagram is applicable for the following AC topologies: 3 Phase 4 Wire Star, 3 Phase 4 Wire Delta L1-N-L2, 3 Phase 4 Wire Delta L1-N-L3 and 3 Phase 4 Wire Delta *L2-N-L3*. For further details of module configuration to suit these different topologies, refer to DSE Publication: *057-238 DSE8610 MKII Configuration Suite PC Software Manual.*

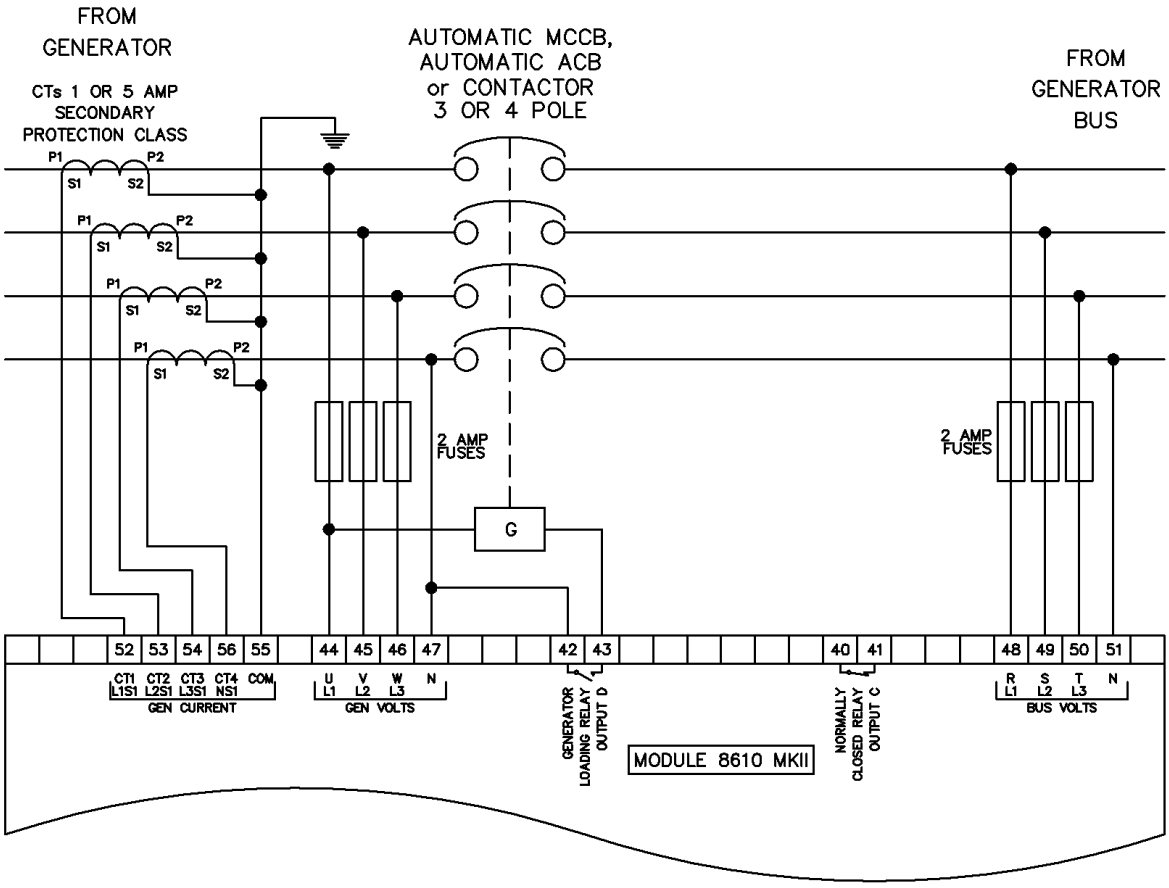

3.4.14 3 PHASE 4 WIRE WITH UNRESTRICTED EARTH FAULT

NOTE: The below diagram is applicable for the following AC topologies: 3 Phase 4 Wire Star, 3 Phase 4 Wire Delta L1-N-L2, 3 Phase 4 Wire Delta L1-N-L3 and 3 Phase 4 Wire Delta *L2-N-L3*. For further details of module configuration to suit these different topologies, refer to DSE Publication: *057-238 DSE8610 MKII Configuration Suite PC Software Manual.*

This example shows the CTs in the neutral to earth link for a three phase four wire system to provide unrestricted earth fault protection, but the same philosophy is applicable to the other topologies.

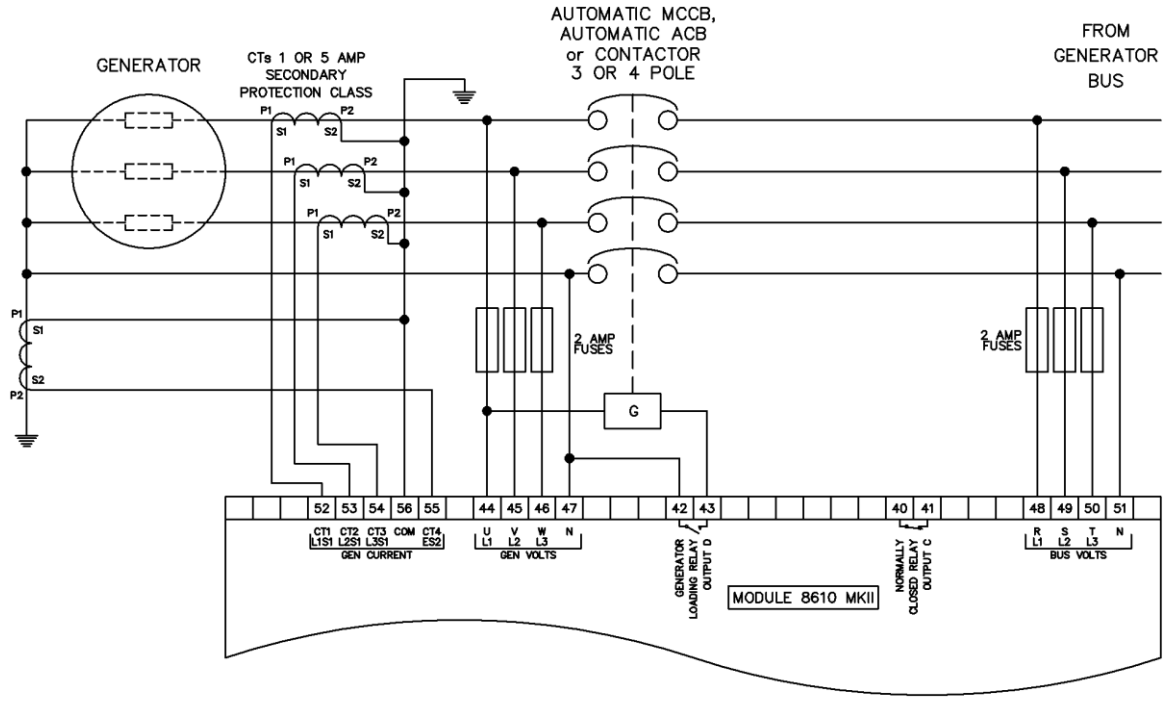

3.5 TYPICAL SINGLE LINE APPLICATION DRAWINGS

3.5.1 MULTI GENERATORS FOR PRIME POWER

NOTE: The below diagram is available in a larger scale. Contact DSE technical support for further information, support@deepseaelectronics.com.

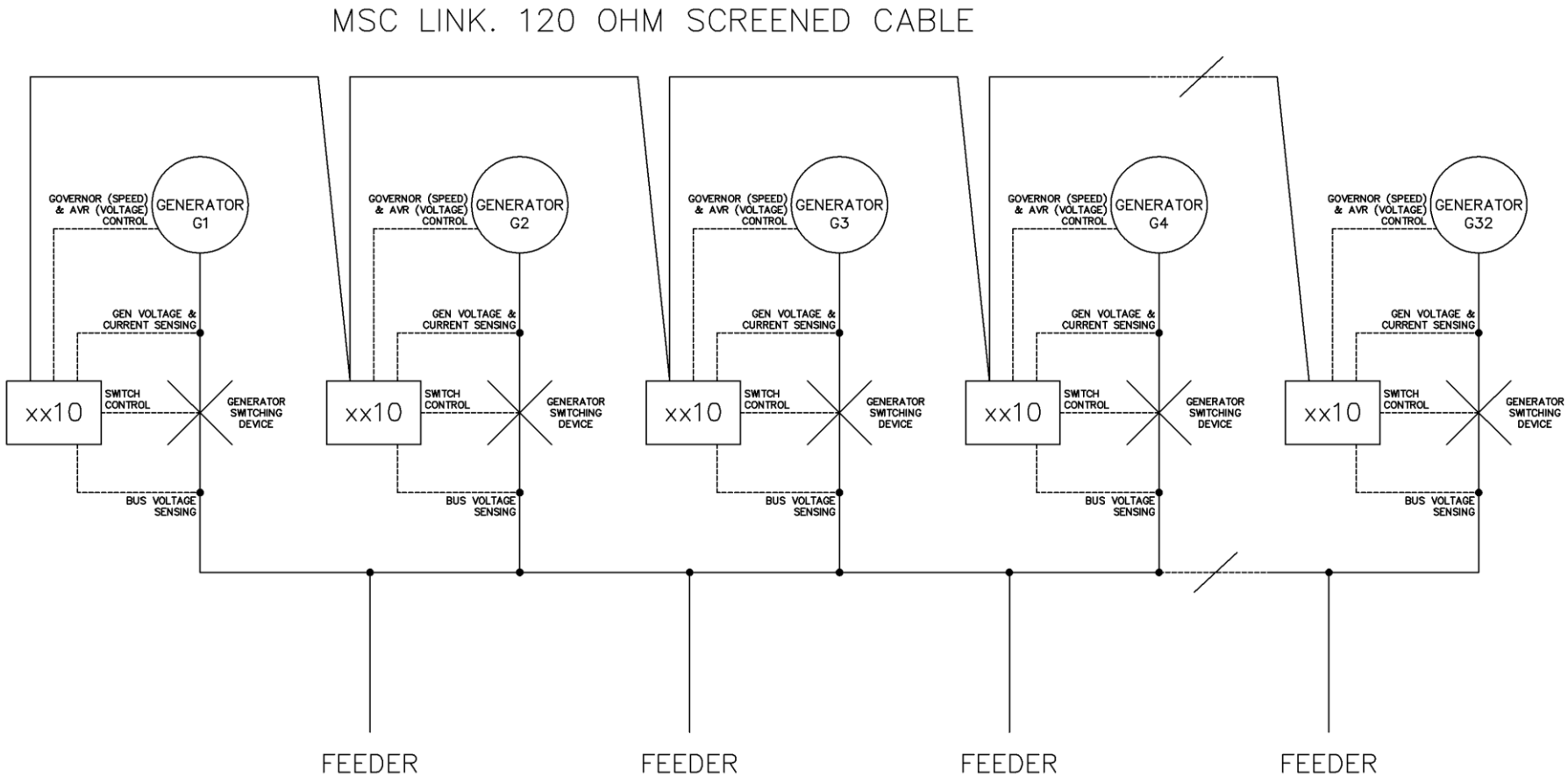

3.5.2 MULTI GENERATORS FOR PRIME POWER USING LOAD-SHARE LINES

NOTE: The below diagram is available in a larger scale. Contact DSE technical support for further information, support@deepseaelectronics.com.

NOTE: To use analogue loadshare lines from external *Load Share Units*, each DSE8x10 MKII must be fitted with a DSE123 to convert its MSC link. It is advised that the system is controlled by an external third-party *Logic Controller* to provide automatic start/stop facilities and protections. For further information, refer to DSE Publication: 057-003 *DSE123 Operators Manual or* contact DSE technical support support@deepseaelectronics.com.

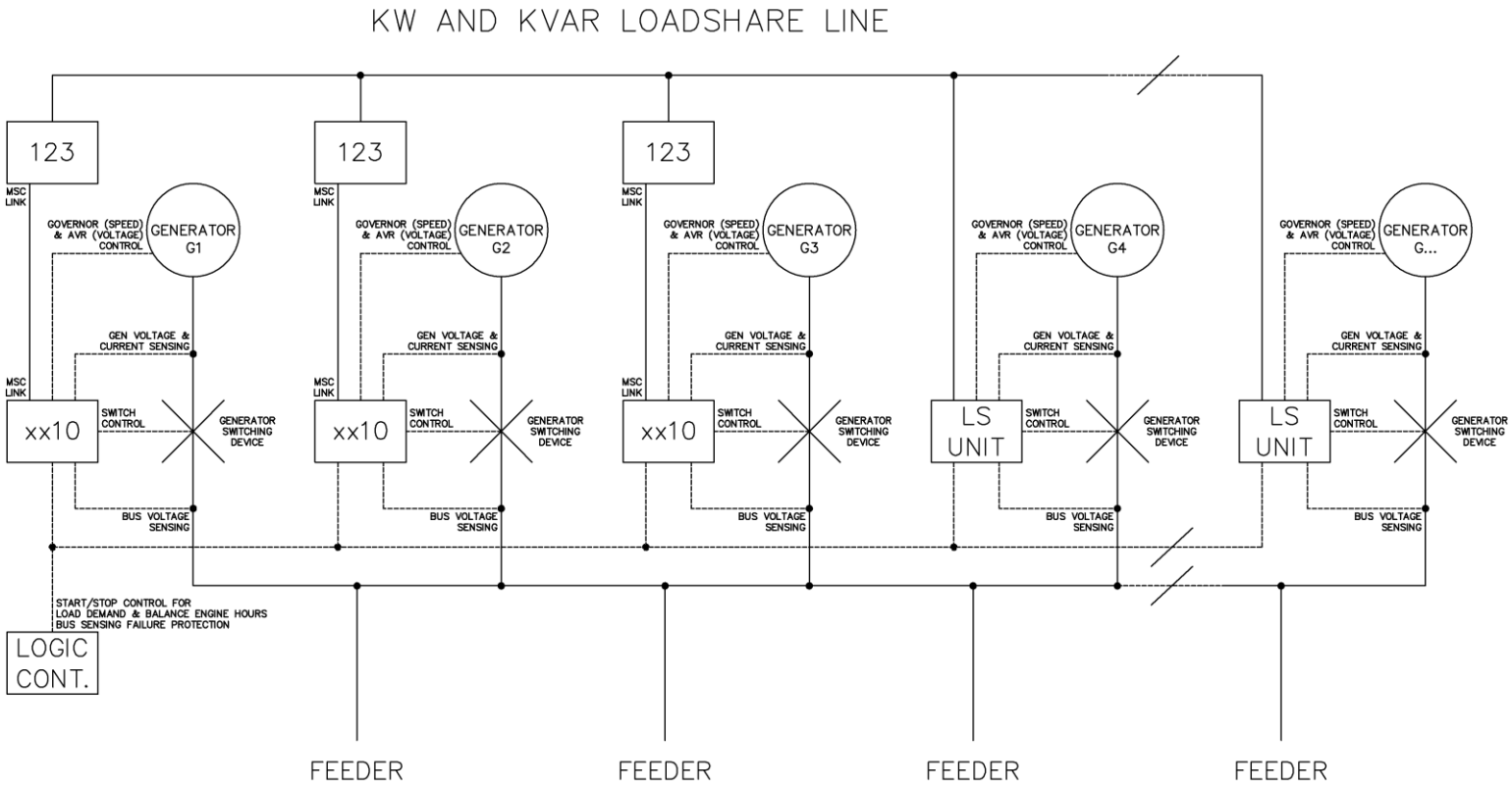

3.5.3 MULTI GENERATORS FOR PRIME POWER WITH BUS COUPLERS

NOTE: The below diagram is available in a larger scale. Contact DSE technical support for further information, support@deepseaelectronics.com.

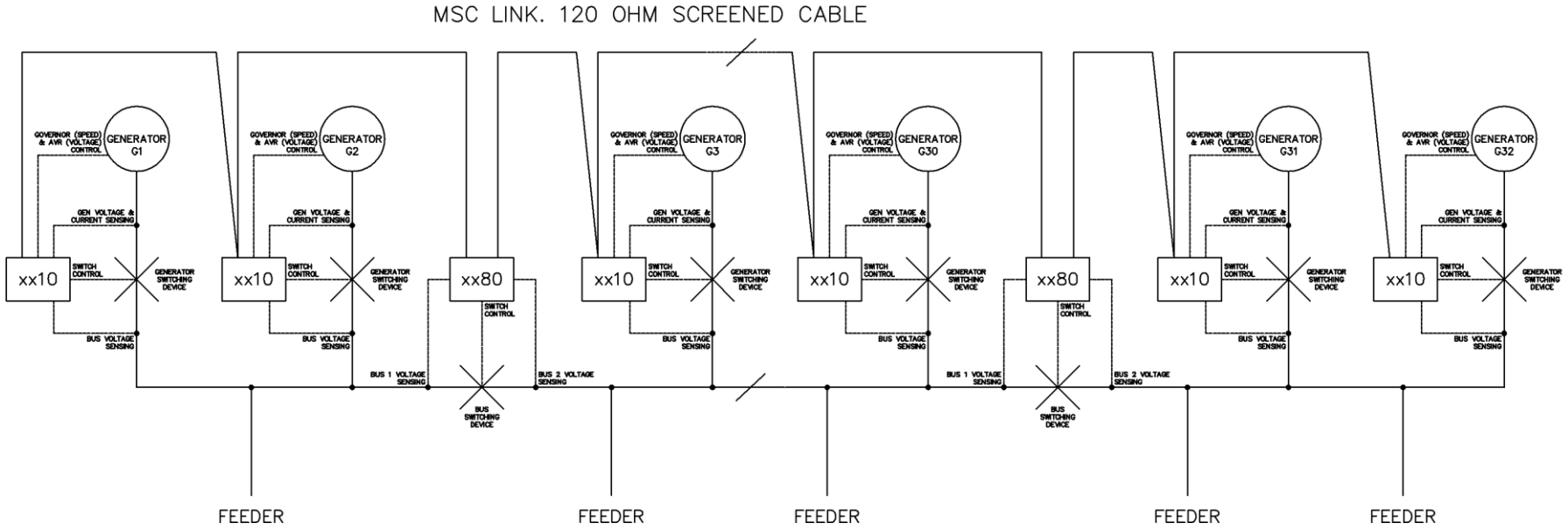

3.5.4 MULTI GENERATORS WITH SINGLE SYNCHRONISING MAINS SWITCH

NOTE: The below diagram is available in a larger scale. Contact DSE technical support for further information, support@deepseaelectronics.com .

NOTE: To use the DSE8x60 MKII without a bus breaker, the *No Bus Breaker* option in the DSE8x10 MKII and DSE8x60 MKII modules must be enabled. For further details of module configuration, refer to DSE Publication: 057-238 *DSE8610 MKII Configuration Suite PC Software Manual and* DSE Publication: 057-257 *DSE8660 MKII Configuration Suite PC Software Manual, or c*ontact DSE technical support for further information, support@deepseaelectronics.com.

NOTE: When the *No Bus Breaker* option is enabled, only one DSE8x60 MKII unit must be used in the system

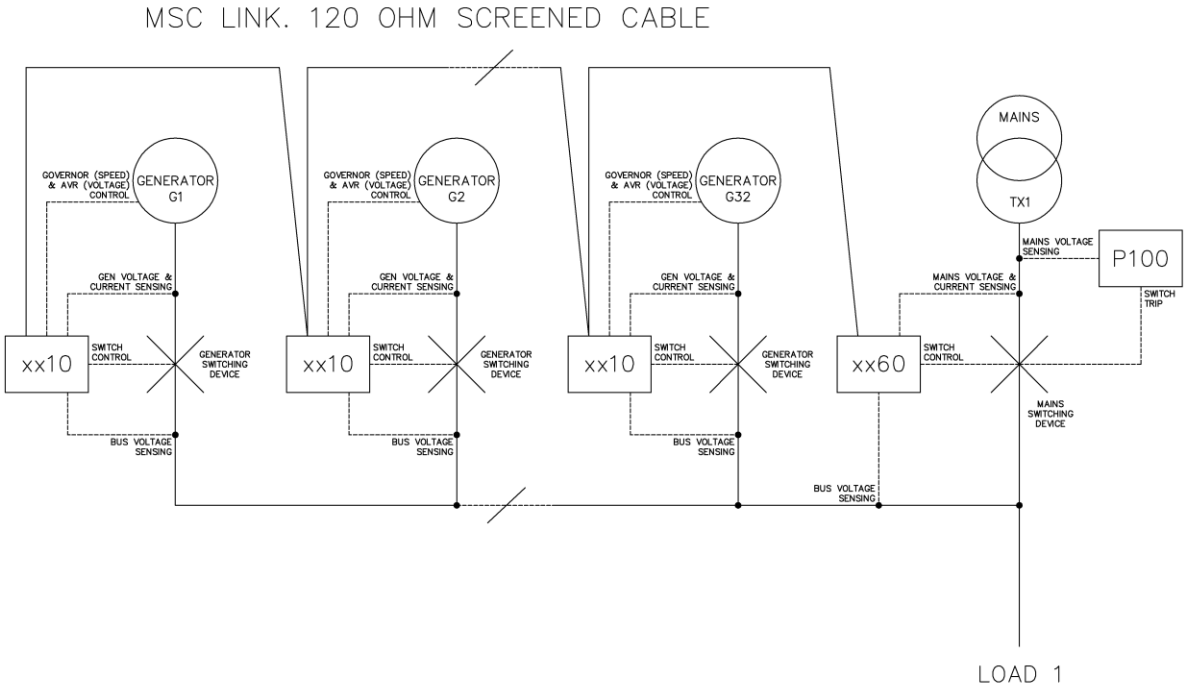

3.5.5 MULTI GENERATORS WITH SINGLE SYNCHRONISING TRANSFER SWITCH

NOTE: The below diagram is available in a larger scale. Contact DSE technical support for further information, support@deepseaelectronics.com .

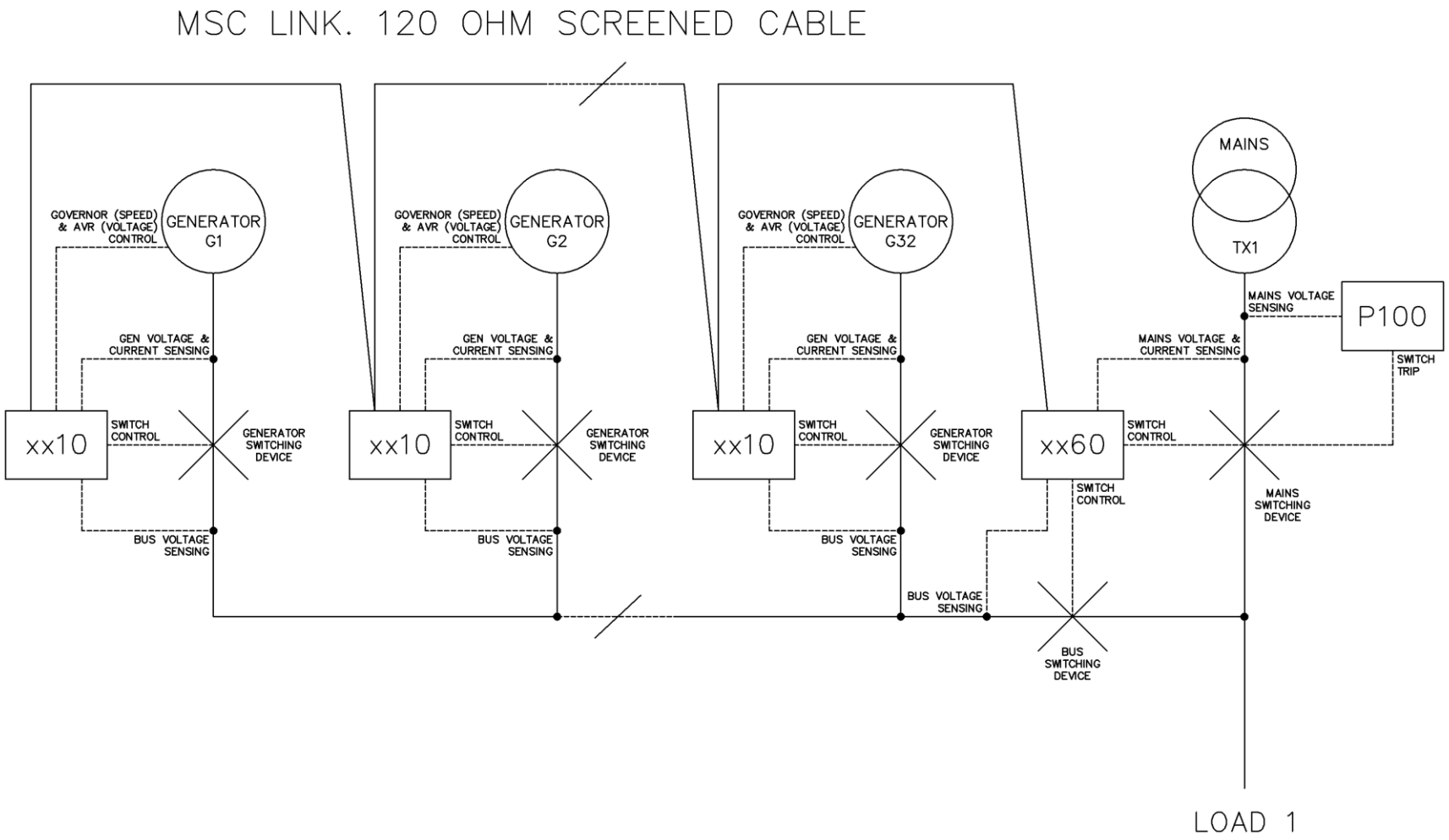

3.5.6 MULTI GENERATORS WITH TWO SYNCHRONISING TRANSFER SWITCHES

NOTE: The below diagram is available in a larger scale. Contact DSE technical support for further information, support@deepseaelectronics.com .

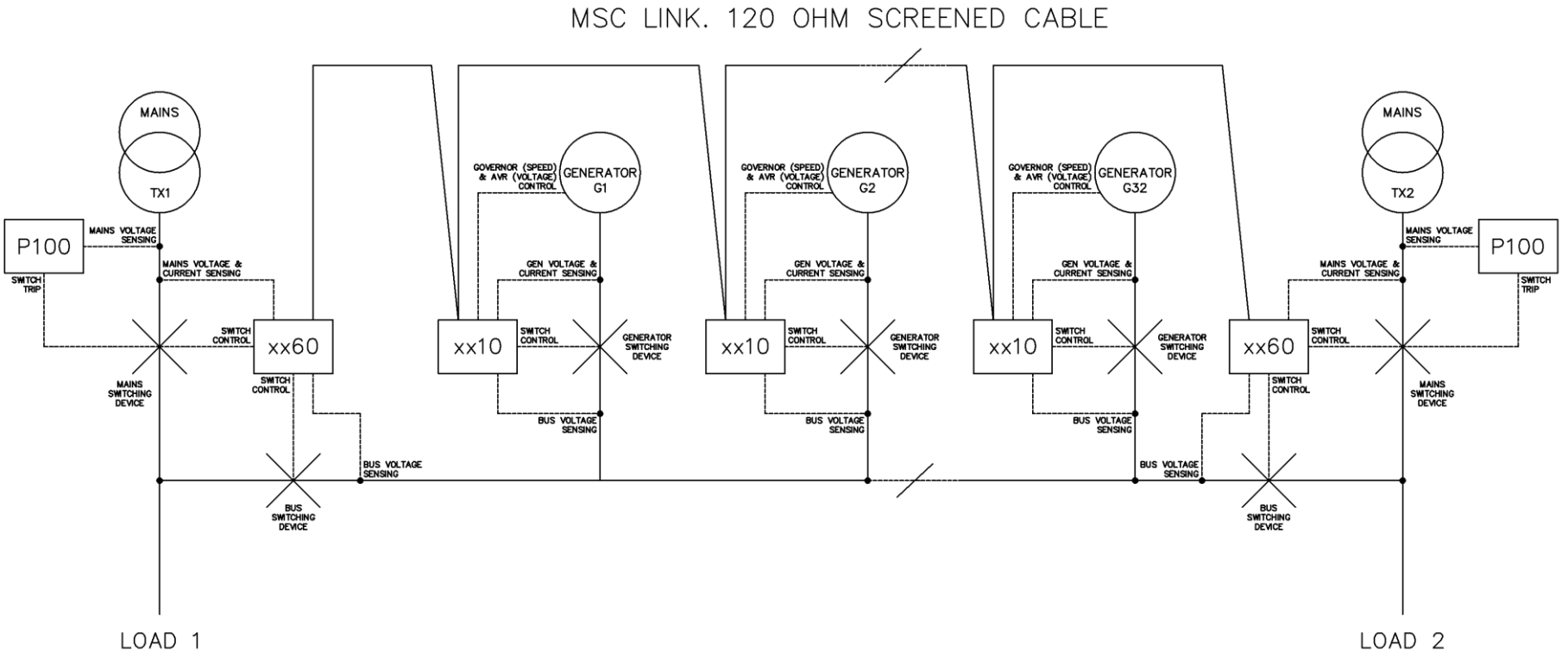

3.5.7 MULTI GENERATORS & SYNCHRONISING TRANSFER SWITCHES

NOTE: The below diagram is available in a larger scale. Contact DSE technical support for further information, support@deepseaelectronics.com .

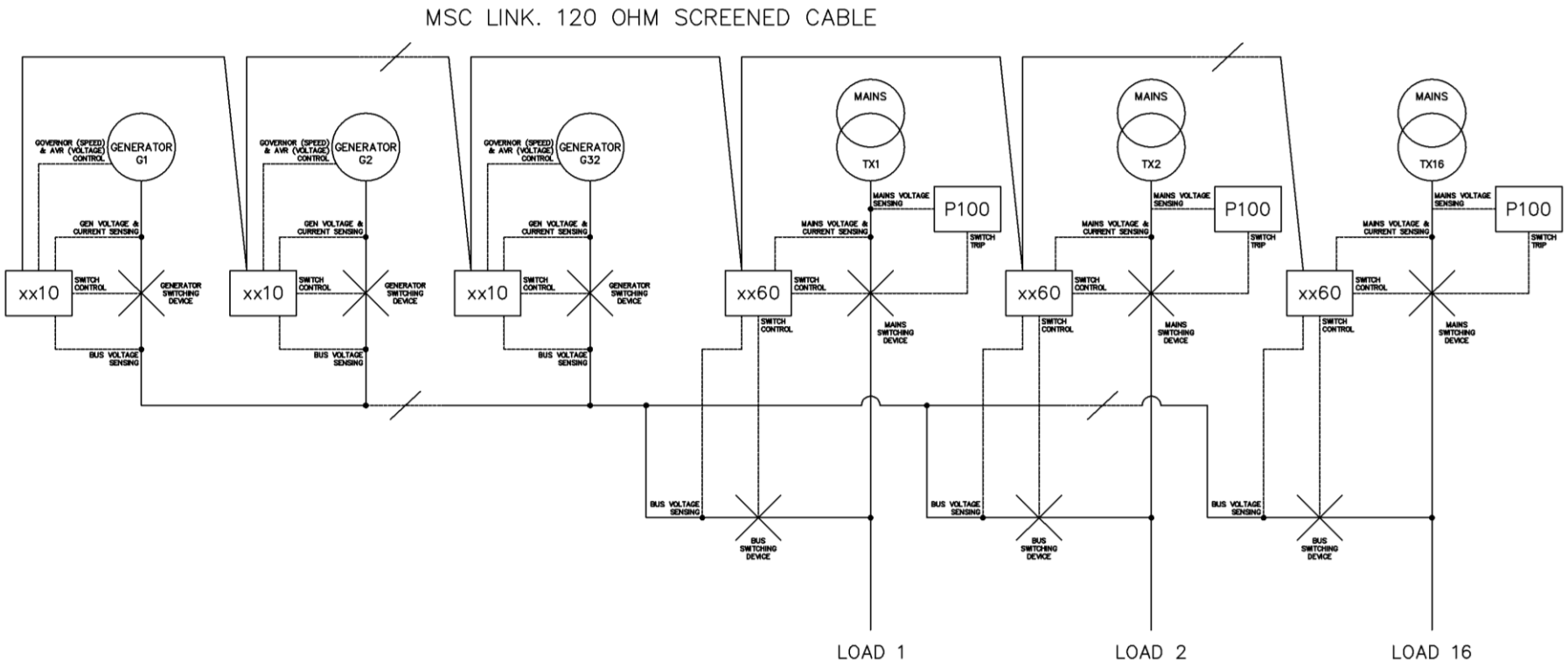

3.5.8 MULTI GENERATORS & TRANSFER SWITCHES WITH BUS COUPLER

NOTE: The below diagram is available in a larger scale. Contact DSE technical support for further information, support@deepseaelectronics.com .

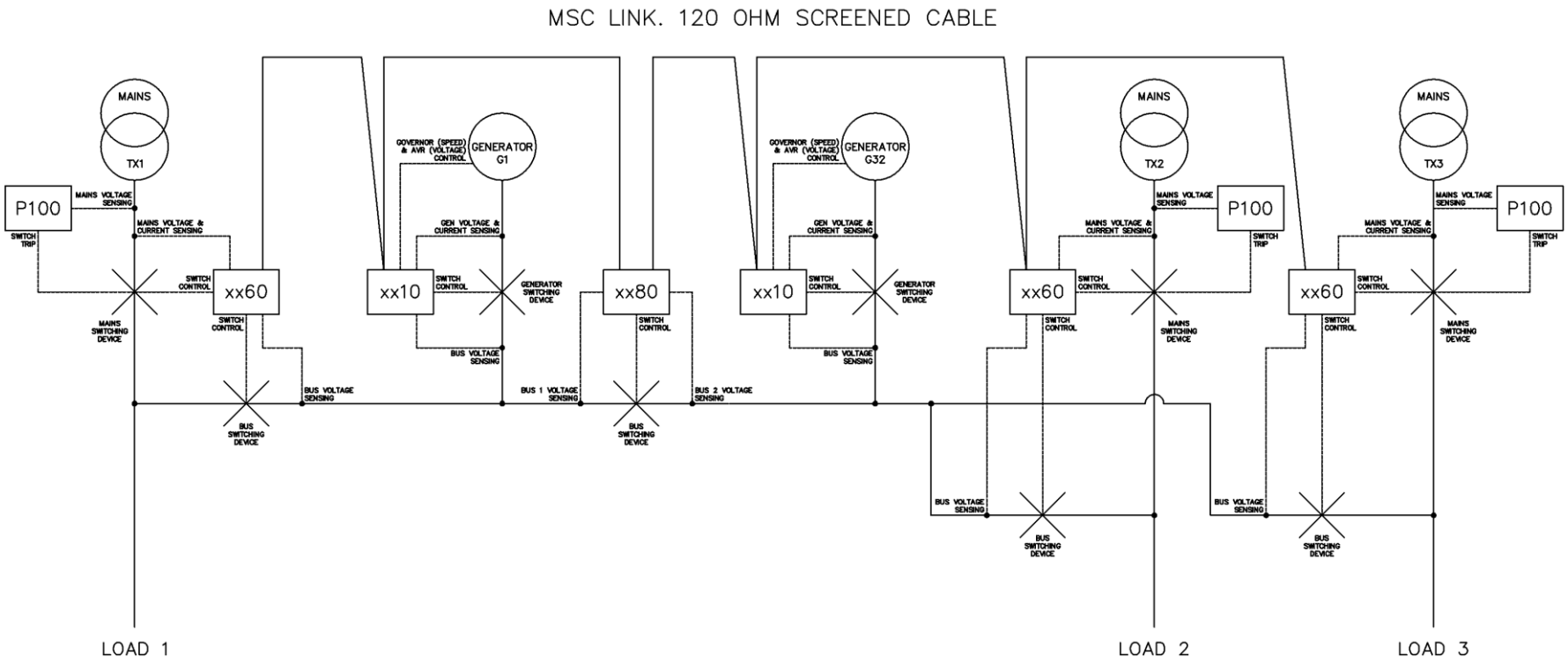

3.5.9 SINGLE GENERATOR EXPORTING (BASE LOADING) POWER

NOTE: When the DSE8x10 MKII unit is used for exporting (base loading) power it cannot be used for synchronising back to the mains upon its return without a DSE8x60 unit. For further details of export (base loading) power and its operation, refer to DSE Publication: *056-054 DSExx10 in Fixed Export.*

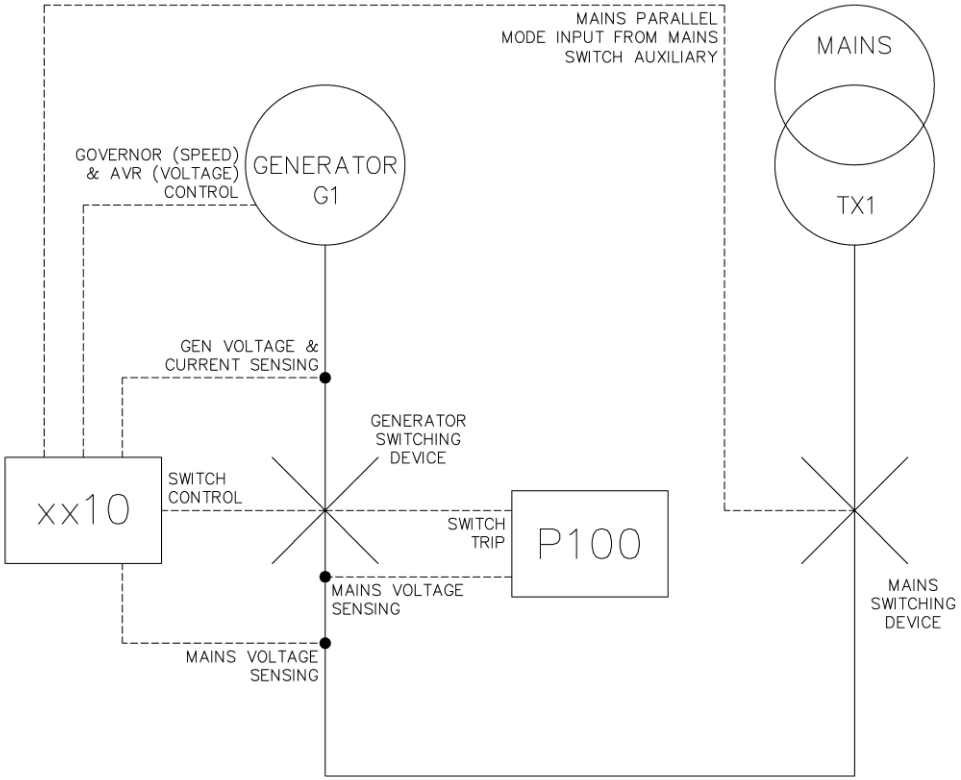

3.5.10 MULTI GENERATORS EXPORTING (BASE LOADING) POWER

NOTE: The below diagram is available in a larger scale. Contact DSE technical support for further information, support@deepseaelectronics.com .

NOTE: When the DSE8x10 MKII unit is used for exporting (base loading) power it cannot be used for synchronising back to the mains upon its return without a DSE8x60 unit. For further details of export (base loading) power and its operation, refer to DSE Publication: *056-054 DSExx10 in Fixed Export.*

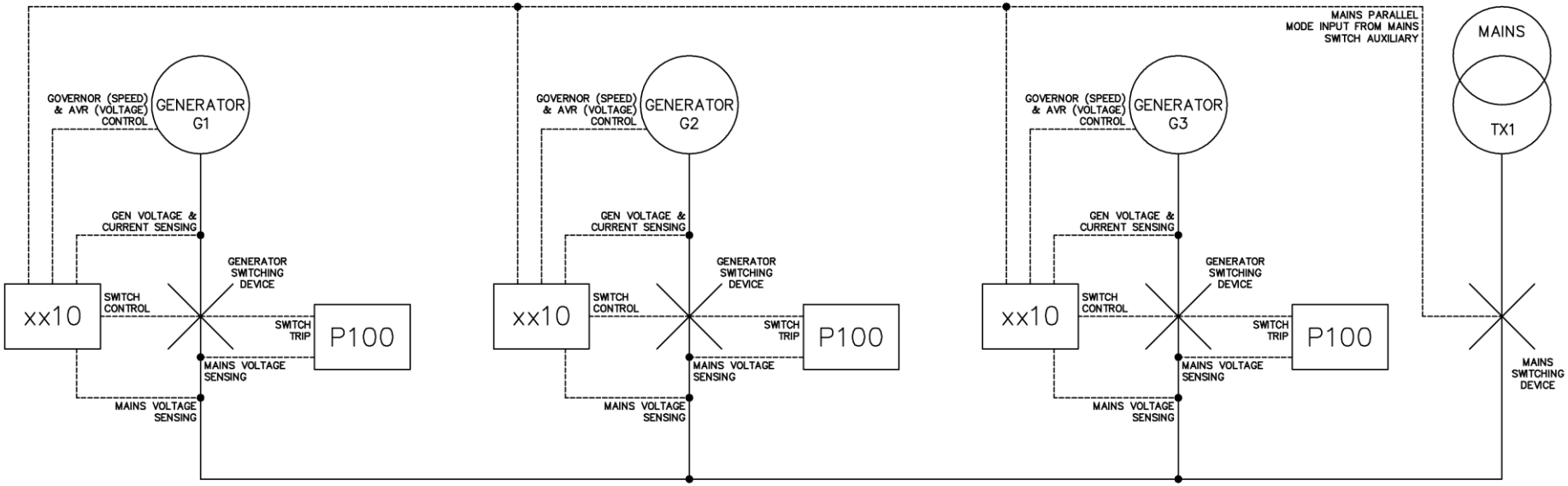

4 DESCRIPTION OF CONTROLS

CAUTION: The module may instruct an engine start event due to external influences. Therefore, it is possible for the engine to start at any time without warning. Prior to performing any maintenance on the system, it is recommended that steps are taken to remove the battery and isolate supplies.

NOTE: The following descriptions detail the sequences followed by a module containing the standard 'factory configuration'. Always refer to your configuration source for the exact sequences and timers observed by any particular module in the field.

Control of the module is via push buttons mounted on the front of the module with ***Stop/Reset Mode*** , ***Manual Mode*** , ***Auto Mode*** ,***Start*** ***Close Generator*** and ***Open Generator*** functions. For normal operation, these are the only controls which need to be operated. Details of their operation are provided later in this document.

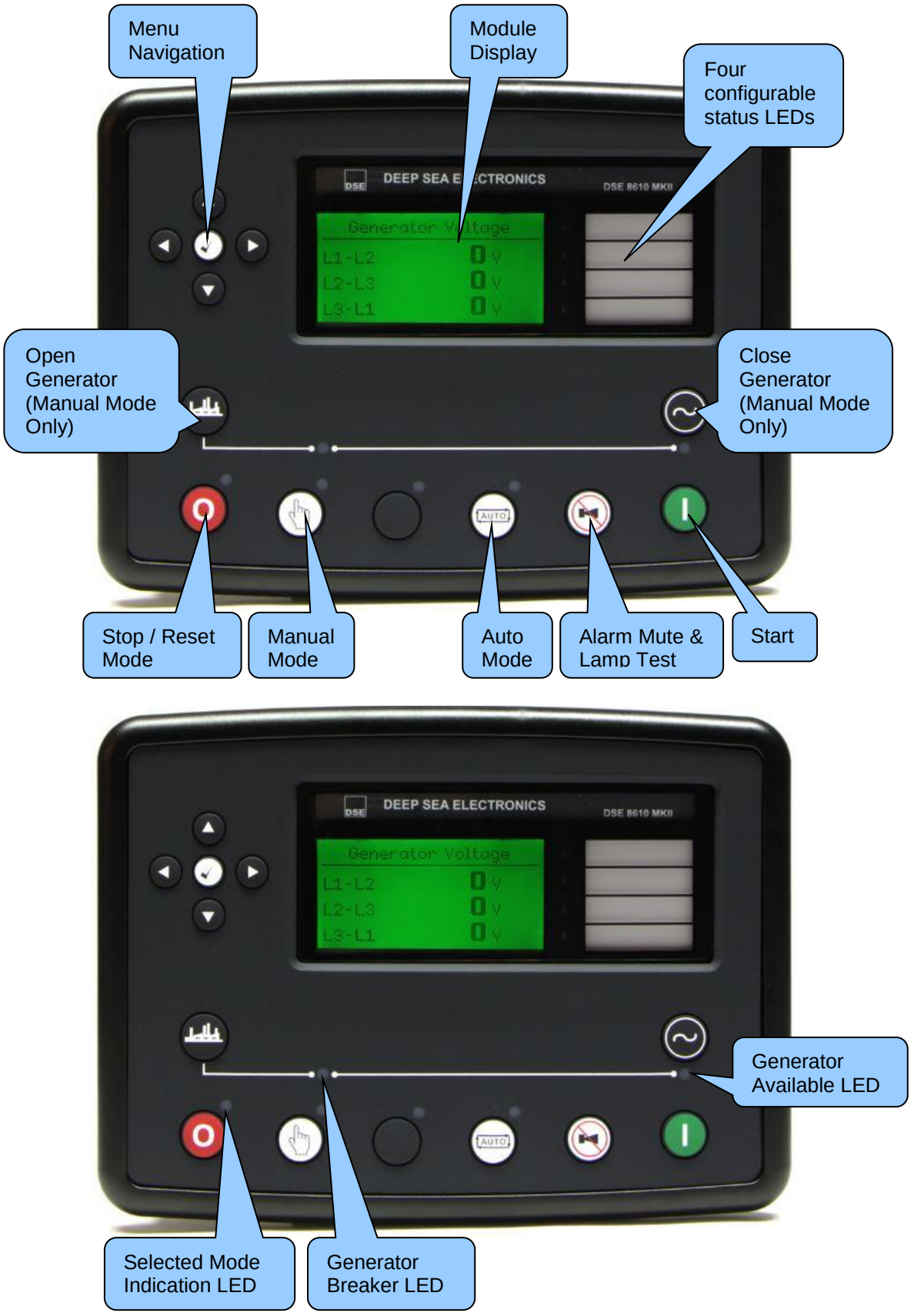
Menu Navigation
Module Display
Four configurable status LEDs
Open Generator (Manual Mode Only)
Close Generator (Manual Mode Only)
Stop / Reset Mode
Manual Mode
Auto Mode
Alarm Mute & Lamp Test
Start
DEEP SEA ELECTRONICS
DSE 8610 MKII
Generator Voltage
L1-L2 0 V
L2-L3 0 V
L3-L1 0 V
AUTO
Generator Available LED
Selected Mode Indication LED
Generator Breaker LED

4.1 CONTROL PUSH BUTTONS

NOTE: For further details, see section entitled *Operation* elsewhere in this manual.

Icon	Description
	**Stop / Reset Mode** This button places the module into its ***Stop/Reset Mode*** O. This clears any alarm conditions for which the triggering criteria has been removed. If the engine is running and the module is put into ***Stop/Reset Mode*** O, the module automatically instructs the generator off load *('**Close Generator Output**' becomes inactive)* ***Stop/Reset Mode*** O the generator remains at rest
	**Manual Mode** This button places the module into its ***Manual Mode*** . Once in ***Manual Mode*** , the module responds to the ***Start*** I button to start the generator and run it off load. To place the generator on load, use the ***Transfer to Generator*** button. The module automatically instructs the generator to synchronise and once in sync, to be place the generator on load *('**Close Generator Output**' becomes active).* To place the generator off load, use the ***Open Generator*** button. The module automatically ramps the load off the generator and then takes it off load *('**Close Generator Output**' becomes inactive).* Additional digital inputs are available to perform these functions. If the generator is running off-load in ***Manual Mode*** and on load signal becomes active, the module automatically instructs the generator to synchronise and once in sync, to be place the generator on load *('**Close Generator Output**' becomes active)*. Upon removal of the on load signal, the generator remains on load until either selection of the ***Stop/Reset Mode*** O or ***Auto Mode*** .
	**Auto Mode** This button places the module into its ***Auto Mode*** . This mode allows the module to control the function of the generator automatically. The module monitors numerous start requests via inputs on the MSC link and when one has been made, the set is automatically started. Once the generator is available, the module automatically instructs the generator to synchronise and once in sync, to be place the generator on load *('**Close Generator Output**' becomes active).* Upon removal of the starting signal, the module starts the *Return Delay Timer* and once expired, the load is automatically ramped off the generator and then it is taken off load *('**Close Generator Output**' becomes inactive).* The generator then continues to run for the duration of the *Cooling Timer* until it stops. The module then waits for the next start event.

NOTE: For further details, see section entitled *Operation* elsewhere in this manual.

Icon	Description
	**Alarm Mute / Lamp Test** This button silences the audible alarm in the controller, de-activates the *Audible Alarm* output (if configured) and illuminates all of the LEDs on the module's facia as a lamp test function.
	**Start** This button is only active in the ***Stop/Reset Mode*** , ***Manual Mode*** Pressing the ***Start*** button in ***Stop/Reset Mode*** powers up the engine's ECU but does not start the engine. This can be used to check the status of the CAN communication and to prime the fuel system. Pressing the ***Start*** button in ***Manual Mode*** starts the generator and runs it off load in ***Manual Mode***
	**Menu Navigation** Used for navigating the instrumentation, event log and configuration screens.
	**Close Generator** The ***Close Generator*** button controls the operation of the generator load switch and is only active in the ***Manual Mode*** once the generator is available. Pressing the ***Close Generator*** button when the generator is available and off load automatically instructs the generator to synchronise and once in sync, to be place the generator on load *('**Close Generator Output**' becomes active).* If the generator bus is dead (has not supply on it) the generator is placed on load immediately. Further presses of the ***Close Generator*** button have no effect.
	**Open Generator** The ***Open Generator*** button is only active in the ***Manual Mode*** and allows the operator to open the generator load switch. Pressing the ***Open Generator*** button when the Generator is on load, automatically ramps the load off the generator and then takes it off load *('**Close Generator Output**' becomes inactive).* Further presses of the ***Open Generator*** button have no effect.

4.2 VIEWING THE INSTRUMENT PAGES

NOTE: Depending upon the module's configuration, some display screens may be disabled. For further details of module configuration, refer to DSE Publication: *057-238 DSE8610 MKII Configuration Suite PC Software Manual.*

It is possible to scroll to display the different pages of information by repeatedly operating the ***Next & Previous Page*** buttons.

Example

If you want to view one of the instrument pages towards the end of the list, it may be quicker to scroll left through the pages rather than right!

Status **Generator** **Engine**

And so on until the desired page is reached. Further presses of the ***Next Page Button*** returns the Status page.

The complete order and contents of each information page are given in the following sections

Once selected, the page remains on the LCD display until the user selects a different page, or after an extended period of inactivity (*LCD Page Timer*), the module reverts to the status display.

If no buttons are pressed upon entering an instrumentation page, the instruments displayed are automatically subject to the setting of the *LCD Scroll Timer*.

The *LCD Page* and *LCD Scroll* timers are configurable using the DSE Configuration Suite Software or by using the Front Panel Editor.

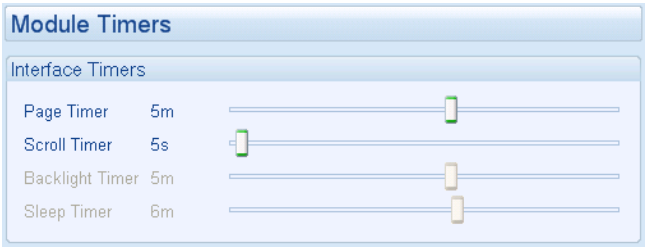

The screenshot shows the factory settings for the timers, taken from the DSE Configuration Suite PC Software.

Alternatively, to scroll manually through all instruments on the currently selected page, press the ***Instrumentation Scroll*** buttons. The 'auto scroll' is disabled.

To re-enable 'auto scroll' press the ***Instrumentation Scroll*** buttons to scroll to the 'title' of the instrumentation page (i.e. Engine). A short time later (the duration of the *LCD Scroll Timer*), the instrumentation display begins to auto scroll.

When scrolling manually, the display automatically returns to the Status page if no buttons are pressed for the duration of the configurable *LCD Page Timer*.

If an alarm becomes active while viewing the status page, the display shows the Alarms page to draw the operator's attention to the alarm condition.

4.2.1 STATUS

NOTE: Press the *Instrumentation Scroll* buttons on the *Status Page* to view other Configurable Status Screens if configured. For further details of module configuration, refer to DSE Publication: *057-238 DSE8610 MKII Configuration Suite PC Software Manual.*

This is the 'home' page, the page that is displayed when no other page has been selected, and the page that is automatically displayed after a period of inactivity (*LCD Page Timer)* of the module control buttons.

This page changes with the action of the controller for example when the generator is running and available:

Status 22:31
Generator at Rest
Stop Mode

Factory setting of *Status* screen showing engine stopped...

Status 22:31
Generator Available

...and engine running

4.2.1.1 GENERATOR LOCKED OUT

Status 22:31
Generator Locked Out

Generator Locked Out indicates that the Generator cannot be started due to an active *Shutdown* or *Electrical Trip Alarm* on the module. Press the ***Next or Previous Page*** button to scroll to the alarms page to investigate. Press the ***Stop/Reset Mode*** button to clear the alarm, if the alarm does not clear the fault is still active.

4.2.1.2 WAITING FOR GENERATOR

NOTE: For further details of module configuration, refer to DSE Publication: 057-238 *DSE8610 MKII Configuration Suite PC Software Manual.*

Status 22:31
Waiting For Generator

Waiting For Generator indicates that the Generator has started but has not reached the required *Loading Voltage* and or *Loading Frequency* as set in the module's configuration. Press the ***Next or Previous Page*** buttons to scroll to the *Generator* page to check to see if the generator voltage and frequency is higher than the configured *Loading Voltage* and *Loading Frequency*.

4.2.1.3 CONFIGURABLE STATUS SCREENS

The contents of the Home Page may vary depending upon configuration by the generator manufacturer or supplier. Below is an example of the Home Page being changed to show engine CAN related information.

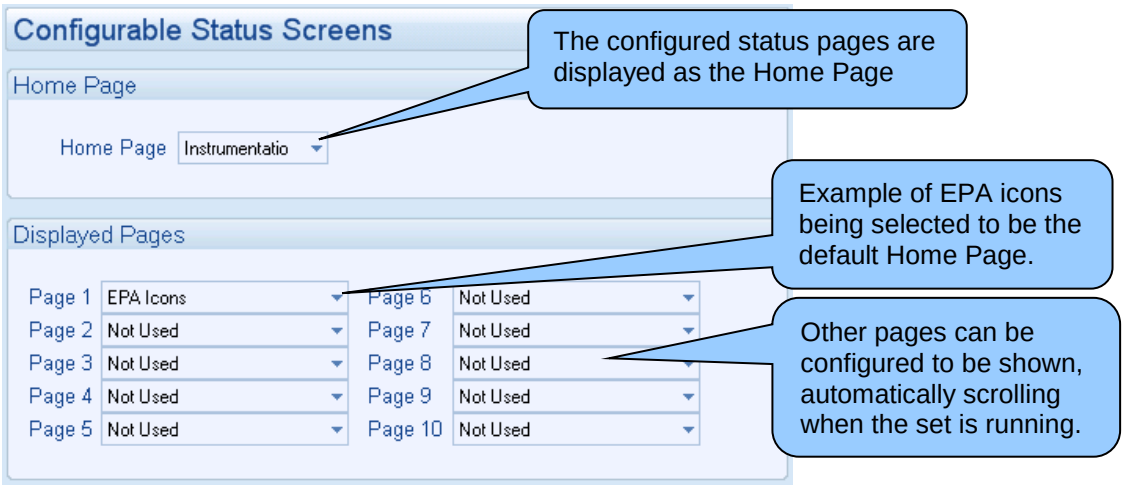

EPA Home Screen Example:



For further information about the icons, refer to *Engine* section elsewhere in this manual.

4.2.2 ENGINE

NOTE*: For further details of support engine, refer to DSE Publication: *057-004 Electronic Engines and DSE Wiring Guide.*

These pages contain instrumentation gathered about the engine measured or derived from the module's inputs, some of which may be obtained from the engine ECU.

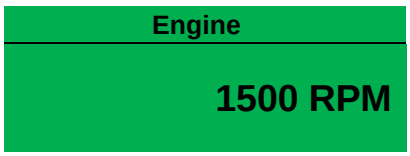

Engine Speed
Oil Pressure
Coolant Temperature
Engine Battery Volts
Engine Run Time
Engine Fuel Level
Oil Temperature*
Coolant Pressure*
Inlet Temperature*
Exhaust Temperature*
Fuel Temperature*
Turbo Pressure*
Fuel Pressure*
Fuel Consumption*
Fuel Used*
Flexible Sensors
Engine Maintenance Alarm 1
Engine Maintenance Alarm 2
Engine Maintenance Alarm 3
After Treatment Fuel Used*
After Treatment Exhaust Gad Temperature*
Engine Oil Level*
Engine Crank Case Pressure*
Engine Coolant Level*
Engine Injector Rail Pressure*
Engine Exhaust Temperature*
Intercooler Temperature*
Turbo Oil Pressure*
Fan Speed*
Water In Fuel*
Air Inlet Pressure*
ECU Regeneration*
ECU Regeneration Icons*
Engine Soot Levels*
DEF Tank Level*
DEF Tank Temperature*
DEF Reagent Cons*
SCR After Treatment Status*
ECU ECR DEF Icons*
DEF Counter Minimum*
DPTC Filter Status*
Engine ECU Link*
Tier 4 Engine Information*

4.2.2.1 MANUAL FUEL PUMP CONTROL

NOTE: For further details of module configuration, refer to DSE Publication: 057-238 *DSE8610 MKII Configuration Suite PC Software Manual.*

Depending upon module configuration, the *Fuel Level* page may include a ***Tick*** icon. This denotes that *Manual Fuel Pump Control* is available by pressing and holding the ***Tick*** button.

Example:

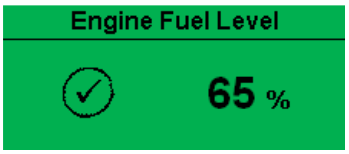

4.2.2.2 DPF REGENERATION LAMPS

NOTE: For further details of module configuration, refer to DSE Publication: 057-238 *DSE8610 MKII Configuration Suite PC Software Manual.*

Depending upon the *Engine Type* selected in the module's configuration, the *Engine* section may include the *DPF Regeneration Lamps* page. This page contains icons to show the status of various ECU functions, some of which are applicable to Tier 4 engine requirements. The icons flash at different rates to show the status of the ECU function, refer to the engine manufacturer for more information about this.

Icon	Fault	Description
	**ECU Amber Alarm**	The module received an Amber fault condition from the engine ECU.
	**ECU Red Alarm**	The module received a Red fault condition from the engine ECU.
	**DPF Active**	The module received a fault indication from the engine ECU informing that the *Diesel Particulate Filter* is active.
	**DPF Inhibited**	The module received a fault indication from the engine ECU informing that the *Diesel Particulate Filter* has been inhibited.
	**DPF Stop**	The module received a fault indication from the engine ECU informing that the *Diesel Particulate Filter* has been stopped.
	**DPF Warning**	The module received a fault condition from the engine ECU informing that the *Diesel Particulate Filter* has a fault condition.
	**HEST Active**	The module received a fault indication from the engine ECU informing that the *High Exhaust System Temperature* is active.
	**DEF Low Level**	The module received a fault condition from the engine ECU informing that the *Diesel Exhaust Fluid Low Level* is active.
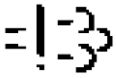	**SCR Inducement**	The module received a fault indication from the engine ECU informing that the *Selective Catalytic Reduction Inducement* is active.

Example:

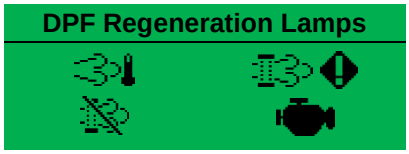

4.2.3 GENERATOR

Contains electrical values of the Generator, measured or derived from the module's voltage and current inputs.

Press the ***Instrumentation Scroll***  buttons scroll through the ***Generator*** parameters.

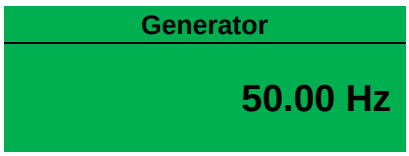

Generator Voltage (Line to Neutral)
Generator Voltage (Line to Line)
Generator Frequency
Generator Current (A)
Generator Load Line to Neutral (kW)
Generator Total Load (kW)
Generator Load Line to Neutral (kVA)
Generator Total Load (kVA)
Generator Single Phase Power Factors
Generator Power Factor Average
Generator Load Line to Neutral (kvar)
Generator Total Load (kvar)
Generator Accumulated Load (kWh, kVAh, kvarh)
Generator Loading Demand Priority
Generator Phase Rotation
Generator Nominal
Generator Active Configuration
Synchroscope Display
Commissioning Screens
MSC Connected 8610

4.2.3.1 COMMISIONING SCREENS

NOTE: Some of the items may be removed from the commissioning screens if they are not applicable to the module configuration.

NOTE: The *Commissioning Screens* are used to gauge how well the module is controlling the generator for Loadsharing. For further details on how to utilise these screens, refer to section entitled elsewhere *DSE Steps to Successful Loadsharing* within this document.

Commissioning screens are available to both aid the commissioning process and also to give additional information about the synchronising and load sharing process.
These screens are enabled and disabled in the module's display editor.

Commissioning Screen 1

L – L	0 V	kW	0.0	Average Line to Line V and total kW
Amps	0 A	kVAr	0.0	Load on the set and total kvar
Pf	-----	kW	0.0%	Power factor and percentage of full load kW
Gov	0.0%	Avr	0.0%	Gov and AVR % of Drive

Commissioning Screen 2

Tgt	0.0%	kW	0.0%	Generator target kW and actual kW percentage
Tgt	0.0%	kVAr	0.0%	Generator target kvar and actual kvar percentage
Pf	-----	Ramp	5.0%	Power factor and ramp rate
Gov	0.0%	Avr	0.0%	Gov and AVR % of Drive

Commissioning Screen 3

NOTE: The third commissioning screen is only available when *Frequency* or *Voltage Droop* is enabled in the module's configuration.

Tgt	0.00	Hz	0.00	Generator target frequency (Hz) and actual frequency (Hz)
Tgt	0.0V	L-N	0.0V	Generator target voltage and actual voltage
kW	0.0%	kvar	0.0%	Generator total kW and kvar percentage
Gov	0.0%	Avr	0.0%	Gov and AVR % of Drive

4.2.3.2 SYNCHROSCOPE

Note: If the module display is showing the status page when the synchronising process begins, the module automatically switches to the Synchroscope page. The ramp progress is also be displayed on the screen once paralleling has taken place.

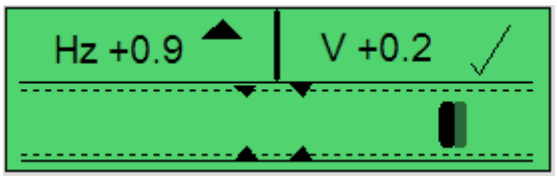

Initially the synchroscope display shows the difference between the bus and generator supplies. Here the display is showing a frequency mismatch of +0.9 Hz and a voltage mismatch of +0.2 V. The genset frequency is too high (indicated by the arrow) and must be reduced. The voltage is high but is within the limits set for synchronising (indicated by the tick).

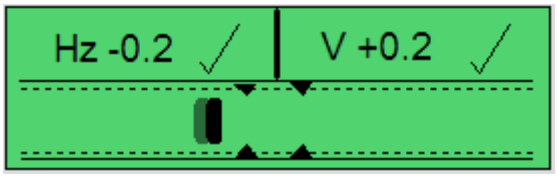

When both the frequency and the voltage differences are within acceptable limits, the phase matching begins. Then the moving bar shows the phase difference between the two supplies. The engine speed is automatically adjusted, altering the phase, until the moving bar enters the centre of the scope.

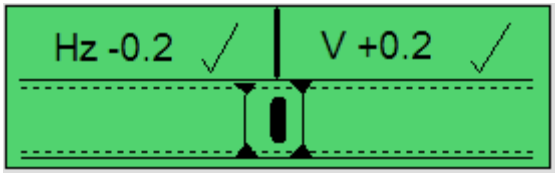

Once the bus and generator supplies are in sync, the module initiates a breaker close signal to the generator load switch closing the generator onto the bus. If synchronism is broken the moving bar will pass out of the synchronising window and the Out of Sync alarm activates. .

4.2.3.3 MSC CONNECTED 8610

NOTE: The *MSC ID* is configured and viewable only using the DSE Configuration Suite Software. For further details, refer to DSE Publication: 057-238 *DSE8610 MKII Configuration Suite PC Software Manual.*

Every module connected on the MSC link has a unique *MSC ID*. The *MSC ID* is automatically set when all the modules are powered up “one at a time”. If all the modules are powered up together, this may result in the *MSC ID Error* alarm activating.

Manually setting the *MSC ID* using the DSE Configuration Suite PC Software allows this alarm to be reset and prevents this from occurring. It also has the benefit of being able to determine which module on the MSC link has a communication issue.

This display screen shows which *MSC IDs* are currently communicating on the MSC link by indicating the number 1. *MSC IDs* that are not currently communicating are indicated by the number 0. If the MSC ID for each module is known, this display screen can be used to determine which module is not communcating on the MSC link.

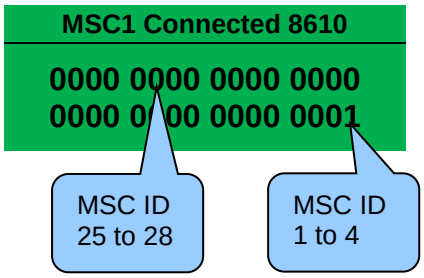

In the below example, module’s with *MSC ID* 1, 4, 6, 15, 23 and 32 are connected on the MSC link. Therefore modules with the other *MSC IDs* are either not connected or communicating.

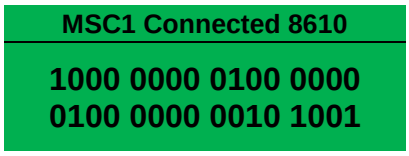

4.2.4 BUS

Contains electrical values of the common generator bus measured or derived from the module's bus inputs.

Press the ***Instrumentation Scroll***  buttons scroll through the ***Bus*** parameters.

Bus Voltage	
L1-L2	415 V
L2-L3	415 V
L3-L1	415 V

Bus Voltage (Line to Neutral)
Bus Voltage (Line to Line)
Bus Frequency
Bus Load kW
Bus Load kVAr
Bus Phase Sequence

4.2.5 EXPANSION

NOTE: Depending upon the module's configuration, some display screens may be disabled. For further details of module configuration, refer to DSE Publication: *057-238 DSE8610 MKII Configuration Suite PC Software Manual.*

Contains measured values from various input expansion modules that are connected to the DSE module.

Press the ***Instrumentation Scroll***  buttons scroll through the ***Expansion*** parameters if configured.

Oil Temperature
80 °C 176 °F

DSE2130 Analogue Inputs (Only appears if configured)
DSE2131 Analogue Inputs (Only appears if configured)
DSE2133 Analogue Inputs (Only appears if configured)

4.2.6 CHARGER ID

NOTE: Depending upon the module's configuration, some display screens may be disabled. For further details of module configuration, refer to DSE Publication: *057-238 DSE8610 MKII Configuration Suite PC Software Manual.*

Contains the information and instrumentation of the DSE Intelligent Battery Chargers that are connected to the DSE controller.

Press the ***Instrumentation Scroll***  buttons scroll through the ***Battery Charger*** parameters if configured.

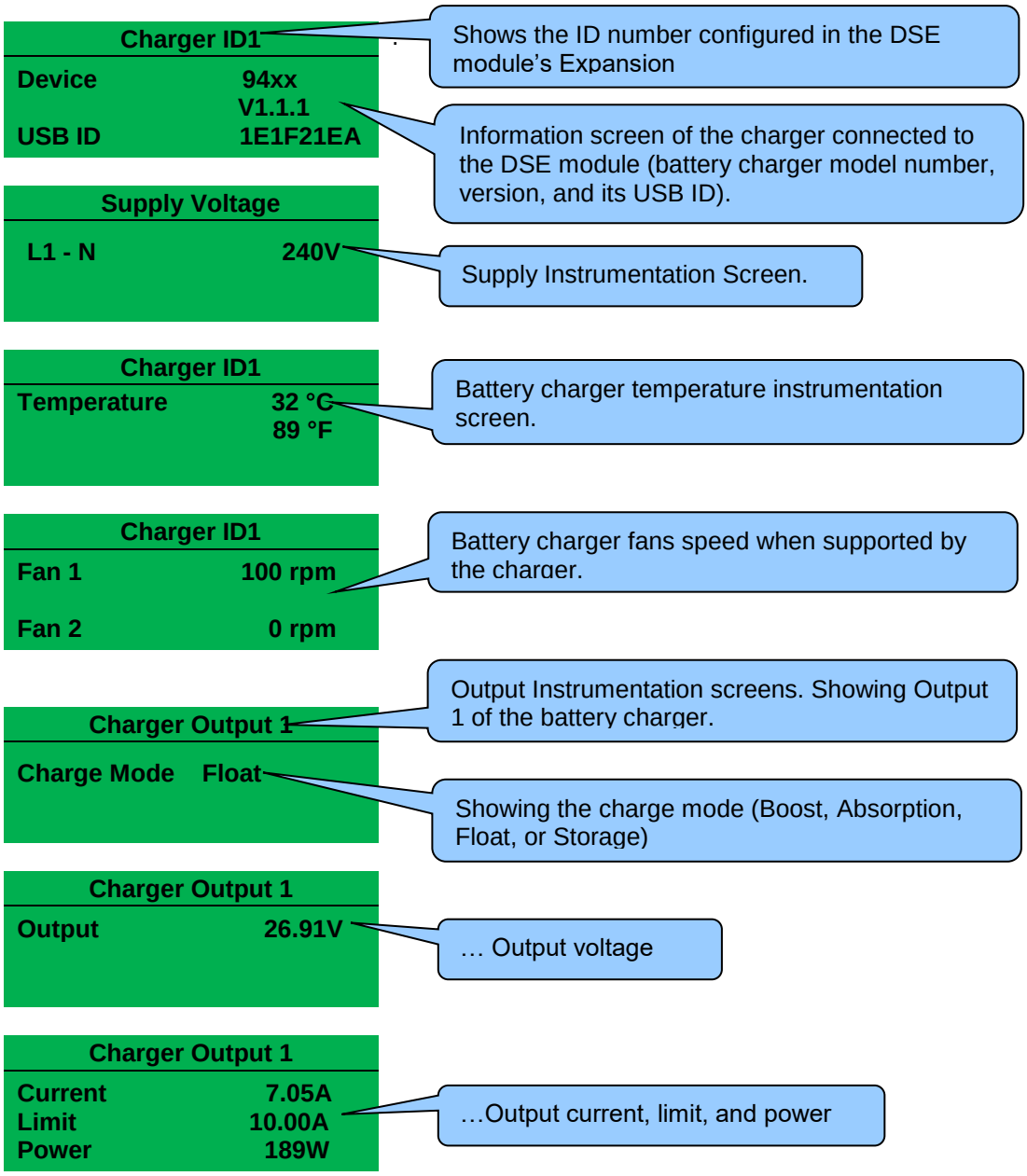

4.2.7 ALARMS

When an alarm is active, the *Internal Audible Alarm* sounds and the Common Alarm LED, if configured, illuminates.

The audible alarm is silenced by pressing the ***Alarm Mute / Lamp Test*** button.

The LCD display jumps from the 'Information page' to display the Alarm Page

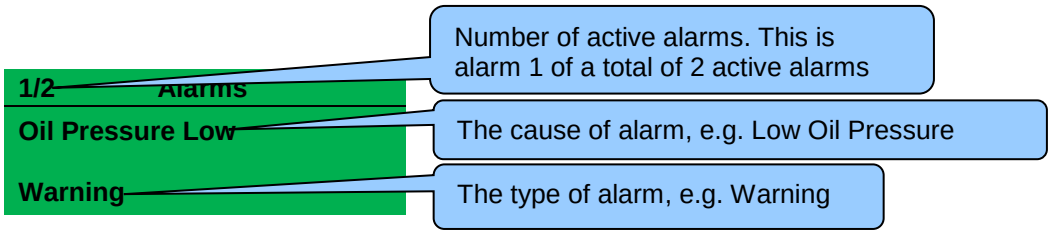

The LCD displays multiple alarms such as "*Coolant Temperature High*", "*Emergency Stop*" and "*Low Coolant Warning*". These automatically scroll in the order that they occurred or press the ***Instrumentation Scroll*** buttons scroll through manually.

In the event of an alarm, the LCD displays the appropriate text. If an additional alarm then occurs, the module displays the appropriate text.

Example:

1/2 Alarms
Low Oil Pressure
Warning

2/2 Alarms
Coolant Temp High
Shutdown

4.2.7.1 ECU ALARMS (CAN FAULT CODES / DTC)

NOTE: For details on these code/graphic meanings, refer to the ECU instructions provided by the engine manufacturer, or contact the engine manufacturer for further assistance.

NOTE: For further details on connection to electronic engines, refer to DSE Publication: *057-004 Electronic Engines And DSE Wiring*

When connected to a suitable CAN engine, the controller displays alarm status messages from the ECU in the *Alarms* section of the display.

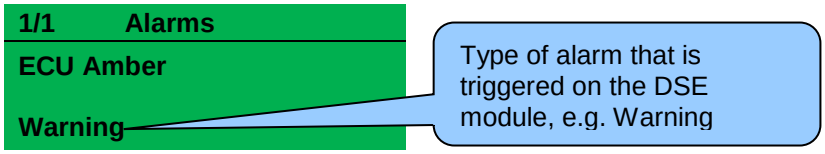

Press the ***Next Page***  button to access the list of *Current Engine DTCs* (Diagnostic Trouble Codes) from the ECU which are DM1 messages.

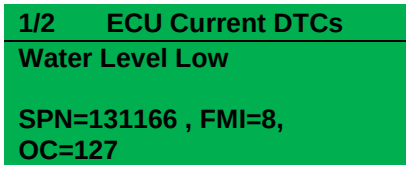

The DM1 DTC is interpreted by the module and is shown on the module's display as a text message. In addition to this, the manufacturer's DTC is shown below.

4.2.8 EVENT LOG

NOTE: For further details of module configuration, refer to DSE Publication: 057-238 *DSE8610 MKII Configuration Suite PC Software Manual.*

The module maintains a log of past alarms and/or selected status changes.
The log size has been increased in the module over past module updates and is always subject to change. At the time of writing, the modules log is capable of storing the last 250 log entries.

Under default factory settings, the event log is configured to include all possible options; however, this is configurable by the system designer using the DSE Configuration Suite software.

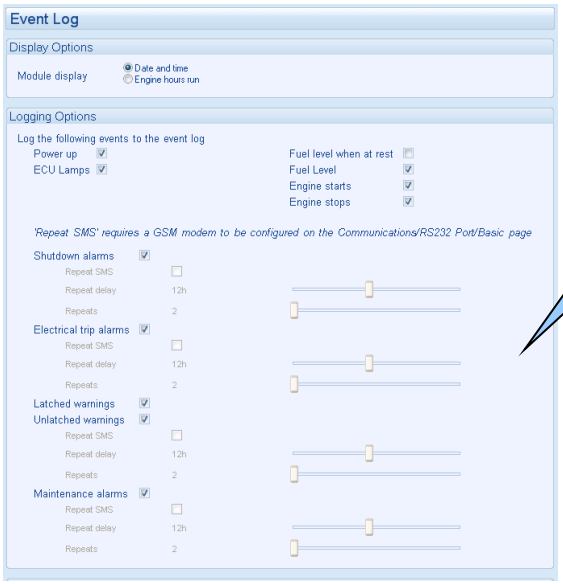

Example showing the possible configuration of the event log (DSE Configuration Suite Software).

This also shows the factory settings of the module.

When the event log is full, any subsequent event overwrites the oldest entry. Hence, the event log always contains the most recent events. The module logs the event type, along with the date and time (or engine running hours if configured to do so).

To view the event log, repeatedly press the ***Next or Previous Page***  buttons until the LCD screen displays the *Event Log* page.

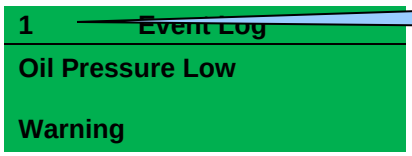

This is event 1

Press the ***Scroll Down***  button to view the next most recent event.

Continuing to press the ***Scroll Down***  button cycles through the past events after which, the display shows the most recent alarm and the cycle begins again.

To exit the event log and return to viewing the instruments, press the ***Next or Previous Page***  buttons to select the next instrumentation page.

4.2.8.1 PROTECTIONS DISABLED

NOTE: For further details on *Protections Disabled*, see section entitled *Protections* elsewhere in this manual.

Configuration is possible to prevent *Shutdown* and *Electrical Trip* alarms from stopping the generator. Under such conditions the operator is informed the events were blocked.

Example:

1 Event Log
Oil Pressure Low
Shutdown Blocked

4.2.8.2 RESET ELECTRICAL TRIP

NOTE: For further details on *Reset Electrical Trip*, see section entitled *Protections* elsewhere in this manual.

Configuration is possible to enable the operator to reset *Electrical Trip* alarm a configurable number of times before the generator has stopped. This is to allow the generator to go back on load without having to perform a cooling run first. Under such conditions the operator is informed the events were overridden.

Example:

2 Event Log
Gen Over Current
Running Electrical Trip

4.2.9 COMMUNICATIONS

4.2.9.1 RS232 SERIAL PORT

NOTE: Factory Default settings are for the RS232 port to be enabled with no modem connected, operating at 115200 baud, MODBUS slave address 10.

NOTE: Connecting a modem directly to the module's RS232 is for legacy support only. When a new installation requires remote communication using the cellular network, refer to DSE products DSE890, DSE891 and DSEWebNet on the DSE website: www.deepseaelectronics.com.

This section is included to give information about the RS232 serial port and external modem (if connected).

The items displayed on this page change depending upon configuration of the module. Refer to the system supplier for further details.

Connected To an RS232 Telephone Modem

When the module is powered up, it sends 'initialisation strings' to the connected modem. It is important therefore that the modem is already powered, or is powered up at the same time as the module. At regular intervals after power up, the modem is reset, and reinitialised, to ensure the modem does not 'hang up'.

If the module does not correctly communicate with the modem, "Modem initialising' appears on the Serial Port instrument screen as shown overleaf.

If the module is set for "incoming calls" or for "incoming and outgoing calls", once the modem is dialled, it answers after two rings (using the factory setting 'initialisation strings). Once the call is established, all data is passed between the dialling PC and the module.

If the module is set for "outgoing calls" or for "incoming and outgoing calls", then the module dials out whenever an alarm is generated.

NOTE: Not all alarms generate a dial out command; this is dependent upon module configuration of the event log. Any event configured to be recorded in the event log causes the modem to dial out to a PC.

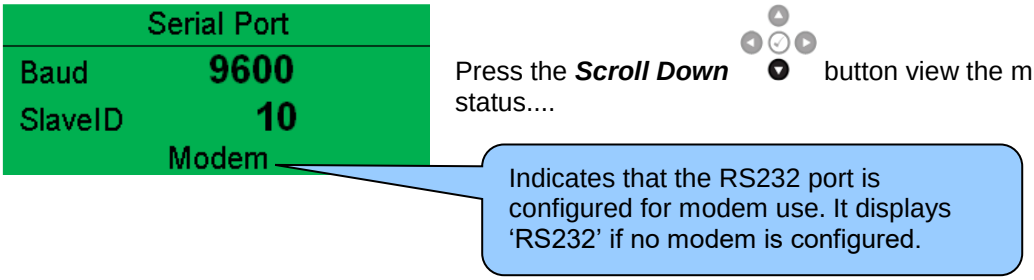

Connected to an RS232 GSM Modem

When the module is powered up, it sends 'initialisation strings' to the connected modem. It is important therefore that the modem is already powered, or is powered up at the same time as the module. At regular intervals after power up, the modem is reset, and reinitialised, to ensure the modem does not 'hang up'.

If the module does not correctly communicate with the modem, "Modem initialising' appears on the Serial Port instrument screen as shown overleaf.

If the module is set for "incoming calls" or for "incoming and outgoing calls", once the modem is dialled, it answers after two rings (using the factory setting 'initialisation strings). Once the call is established, all data is passed between the dialling PC and the module.

If the module is set for "outgoing calls" or for "incoming and outgoing calls", then the module dials out whenever an alarm is generated.

NOTE: Not all alarms generate a dial out command; this is dependent upon module configuration of the event log. Any event configured to be recorded in the event log causes the modem to dial out to a PC.

Many GSM modems are fitted with a status LED to show operator cell status and ringing indicator. These are a useful troubleshooting tool.

In the case of GSM connection problems, try calling the DATA number of the SIMCARD with an ordinary telephone. There should be two rings, followed by the modem answering the call and then 'squealing'. If this does not happen, check all modem connections and double check with the SIM provider that it is a DATA SIM and can operate as a data modem. DATA is NOT the same as FAX or GPRS and is often called Circuit Switched Data (CSD) by the SIM provider.

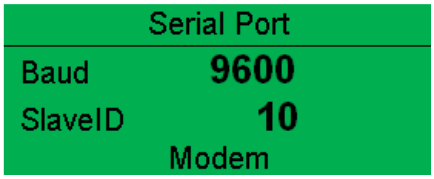

Press the ***Scroll Down***  button view the modem GSM status....

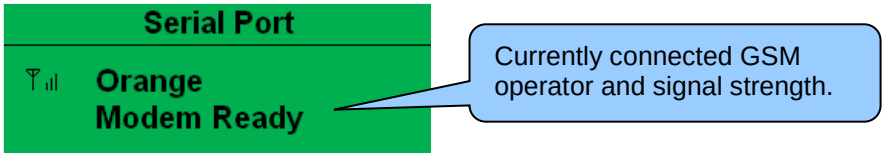

NOTE: In the case of GSM modems, it is important that a DATA ENABLED SIM is used. This is often a different number than the 'voice number' and is often called Circuit Switched Data (CSD) by the SIM provider.

If the GSM modem is not purchased from DSE, ensure that it has been correctly set to operate at 9600 baud.

Modem Initialisation Sequence

The modem attempts to communicate to the module

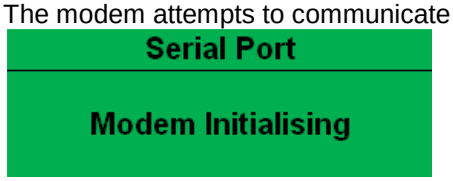

If the Modem and module communicate successfully:

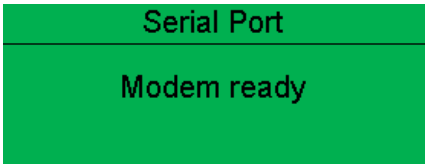

In case of communication failure between the modem and module, the modem is automatically reset, and initialisation is attempted once more:

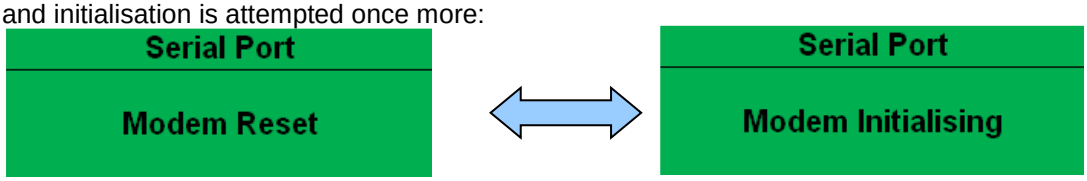

In the case of a module that is unable to communicate with the modem, the display continuously cycles between 'Modem Reset' and 'Modem Initialising' as the module resets the modem and attempts to communicate with it again, this continues until correct communication is established with the modem. In this instance, check connections and verify the modem operation.

Modem Diagnostics

Modem diagnostic screens are included; press the ***Scroll Down***  button when viewing the *RS232 Serial Port* instruments to cycle to the available screens. If experiencing modem communication problems, this information aids troubleshooting.

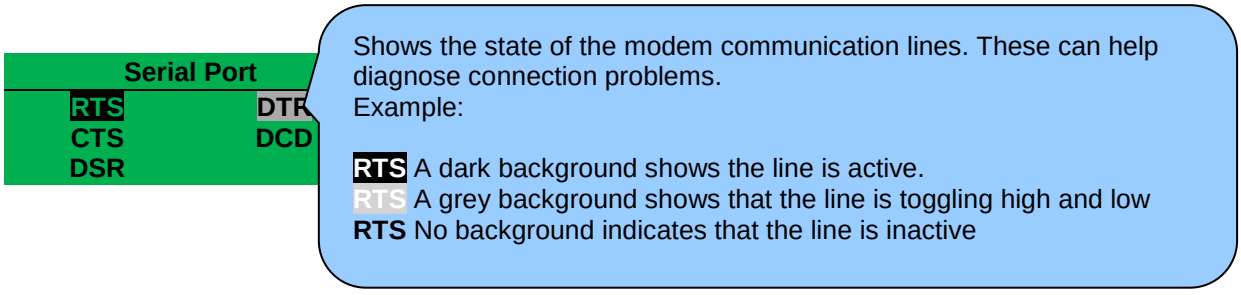

Line	Description	
RTS	Request to Send	Flow Control
CTS	Clear to Send	Flow Control
DSR	Data Set Ready	Ready to Communicate
DTR	Data Terminal Ready	Ready to Communicate
DCD	Data Carrier Detect	Modem is Connected

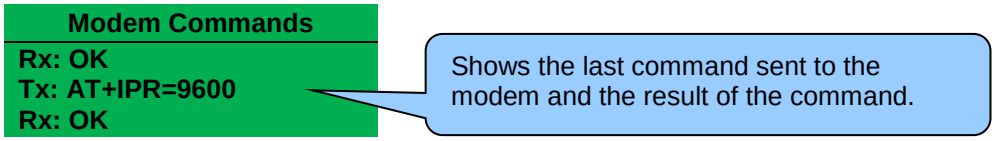

Connected to An RS232 MODBUS Master

The modules operate as a MODBUS RTU slave device. In a MODBUS system, there is only one Master, typically a PLC, HMI system or PC SCADA system.

This master requests for information from the MODBUS slave (The module) and may (in control systems) also send request to change operating modes etc. Unless the Master makes a request, the slave is 'quiet' on the data link.

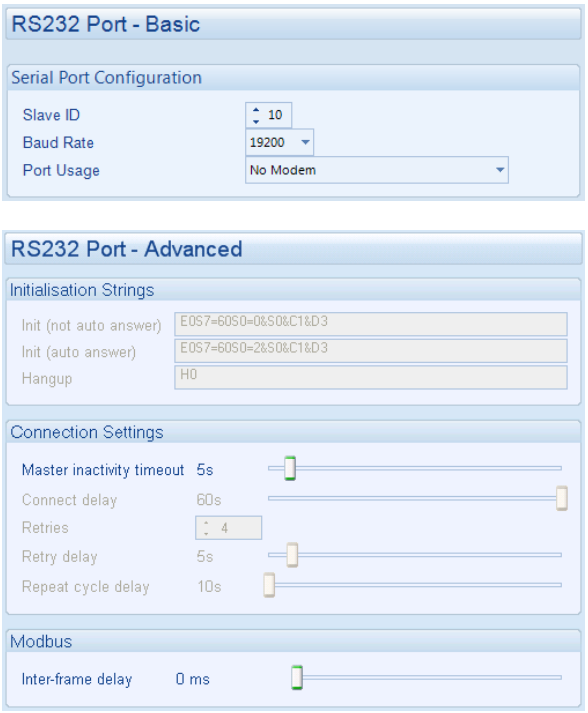

The factory settings are for the module to communicate at 115200 baud, MODBUS slave address 10.

To use the RS232 port, ensure that 'port usage' is correctly set using the DSE Configuration Suite Software.

'Master inactivity timeout' should be set to at least twice the value of the system scan time. For example, if a MODBUS master PLC requests data from the module once per second, the timeout should be set to at least 2 seconds

The DSE MODBUS document containing register mappings inside the DSE module is available upon request from support@deepseaelectronics.com. Email the request along with the serial number of the DSE module to ensure the correct information is sent.

RS232 MODBUS RTU Diagnostics

RS232 MODBUS RTU diagnostic screens are included; press the ***Scroll Down***  button when viewing the *RS232 Serial Port* instruments to cycle to the available screens. If experiencing RS232 MODBUS RTU communication problems, this information aids troubleshooting.

RS232	
Link Quality	**98 %**
RX Rate	**49**
Lost Rate	**1**

Shows the state of the RS232 communication lines. These can help diagnose connection problems.

Link Quality: The quality of the RS232 connection
RX Rate: The number of received message during the packet timeout
Lost Rate: The number of messages that are discarded (invalid messages)

4.2.9.2 RS485 SERIAL PORT

This section is included to give information about the currently selected serial port

The items displayed on this page change depending upon configuration of the module. Refer to the system supplier for further details.

NOTE: Factory Default settings are for the RS485 port to operate at 115200 baud, MODBUS slave address 10.

Connected to an R485 MODBUS Master

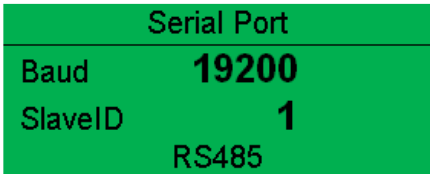

The modules operate as a MODBUS RTU slave device. In a MODBUS system, there is only one Master, typically a PLC, HMI system or PC SCADA system.

This master requests for information from the MODBUS slave (The module) and may (in control systems) also send request to change operating modes etc. Unless the Master makes a request, the slave is 'quiet' on the data link.

The factory settings are for the module to communicate at 115200 baud, MODBUS slave address 10.

'Master inactivity timeout' should be set to at least twice the value of the system scan time. For example, if a MODBUS master PLC requests data from the module once per second, the timeout should be set to at least 2 seconds.

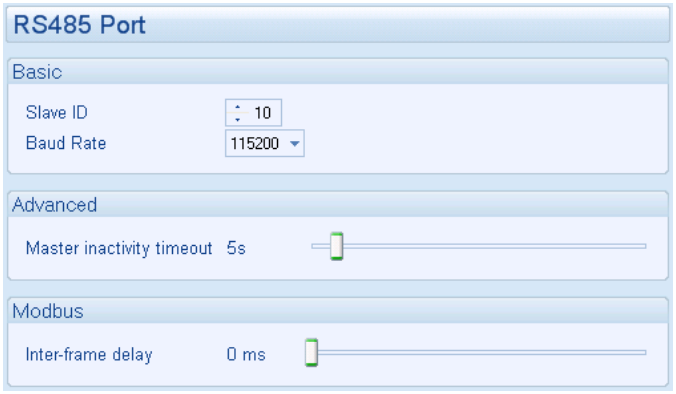

The DSE MODBUS document containing register mappings inside the DSE module is available upon request from support@deepseaelectronics.com. Email the request along with the serial number of the DSE module to ensure the correct information is sent.

RS485 MODBUS RTU Diagnostics

RS485 MODBUS RTU diagnostic screens are included; press the ***Scroll Down***  button when viewing the *RS485 Serial Port* instruments to cycle to the available screens. If experiencing RS485 MODBUS RTU communication problems, this information aids troubleshooting.

RS485 Port 1	
Link Quality	**50 %**
RX Rate	**25**
Lost Rate	**25**

Shows the state of the RS485 communication lines. These can help diagnose connection problems.

Link Quality: The quality of the RS485 connection
RX Rate: The number of received message during the packet timeout
Lost Rate: The number of messages that are discarded (invalid messages)

Typical Requests (Using Pseudo Code)

`BatteryVoltage=ReadRegister(10,0405,1)`: reads register (hex) 0405 as a single register (battery volts) from slave address 10.

`WriteRegister(10,1008,2,35701, 65535-35701)`: Puts the module into AUTO mode by writing to (hex) register 1008, the values 35701 (auto mode) and register 1009 the value 65535-35701 (the bitwise opposite of auto mode)

`Warning=(ReadRegister(10,0306,1) >> 11) & 1)`: reads (hex) 0306 and looks at bit 12 (Warning alarm present)

`ElectricalTrip=(ReadRegister(10,0306,1) >> 10) & 1)`: reads (hex) 0306 and looks at bit 11 (Electrical Trip alarm present)

`ControlMode=ReadRegister(10,0304,2)`: reads (hex) register 0304 (control mode).

4.2.9.3 USB CONNECTION

Whilst in the *Communication* section, press the ***Scroll Down***  button to access more information about the USB Slave Connection status.

USB Connection
Connected

Connected/Inactive: Indicates the connection status of the USB Slave Connection which is normally used for module configuration.

4.2.9.4 ETHERNET

Whilst in the *Communication* section, press the ***Scroll Down***  button to access more information about the network settings.

Network settings are configured using DSE Configuration Suite PC Software. The module must be rebooted for the changes to take effect.

Network
IP Address
192.168.50.76
DHCP Disabled

IP Address: The configured network IP address of the module
DHCP: Dynamic Host Configuration Protocol (DHCP) has been enabled or disabled in the modules configuration.

Press the ***Scroll Down***  button to access more information about the network settings.

Network
Subnet Mask
255.255.255.0

Subnet Mask: The configured network subnet mask of the module.

Network
Gateway Address
192.168.49.76

Gateway Address: The configured network gateway address of the module.

Network
DNS Address
192.168.88.99

DNS Address: The configured network DNS address of the module.

Network
MAC Address
E8.A4.C1.0.A.C2

MAC Address: The MAC address of the module, this cannot be changed and is unique to every Ethernet device.

DHCP	
Host	Host Name
Domain	Domain Name
Vender	Vender Name

DHCP: The DHCP settings of module if configured.

MODBUS Over IP	
TCP Port	502
Pref IP	192.168.20.11

TCP Port: The MODBUS TCP communication port number.
Pref IP: The preferred connection IP address. The module can support up to 5 MODBUS TCP masters. If the preferred IP address is configured, one of those five connections is reserved for the device with the preferred IP.

Ethernet Connection 0
192.168.50.77
Connected

Ethernet Connection #: State of the 5 individual Ethernet connections
IP Address: IP address of the device connected via Ethernet.
Connected/Inactive: State of the port connection

4.2.9.5 DSENET CONNECTION

DSENet diagnostic screens are included; press the ***Scroll Down***  button when viewing the *Communication* instrument section to cycle to the available screen. If experiencing DSENet communication problems, this information aids troubleshooting.

DSENet Connection	
Link Quality	**75 %**
RX Rate	**200**
Lost Rate	**50**

Shows the state of the DSENet communication lines. These can help diagnose connection problems.

Link Quality: The quality of the DSENet connection
RX Rate: The number of received message during the packet timeout
Lost Rate: The number of messages that are discarded (invalid messages)

4.2.9.6 MSC CONNECTION

MSC diagnostic screens are included; press the ***Scroll Down***  button when viewing the *Communication* instrument section to cycle to the available screen. If experiencing MSC communication problems, this information aids troubleshooting.

MSC 1 Connection	
Link Quality	**75 %**

Shows the state of the MSC communication lines. These can help diagnose connection problems.
MSC # Connection: State of the standard (1) or redundant (2) MSC connections.
Link Quality: The quality of the MSC connection

4.2.10 SCHEDULE

NOTE: For further details on the operation of the inbuilt scheduler feature, refer to section entitled *Scheduler* in the *Operation* section of this document.

NOTE: For further details of module configuration, refer to DSE Publication: 057-238 *DSE8610 MKII Configuration Suite PC Software Manual.*

The controller contains an inbuilt exercise run scheduler, capable of automatically starting and stopping the set or inhibiting the set from starting. Up to 16 scheduled (in two banks of 8) start/stop/inhibiting start sequences can be configured to repeat on a 7-day or 28-day cycle.

Scheduled runs may be on load or off load depending upon module configuration.

This section of the module's display shows how exactly the scheduler (if enabled) is configured. Under default factory settings the Schedule is not viewable. It is enabled by the system designer using the DSE Configuration Suite software.

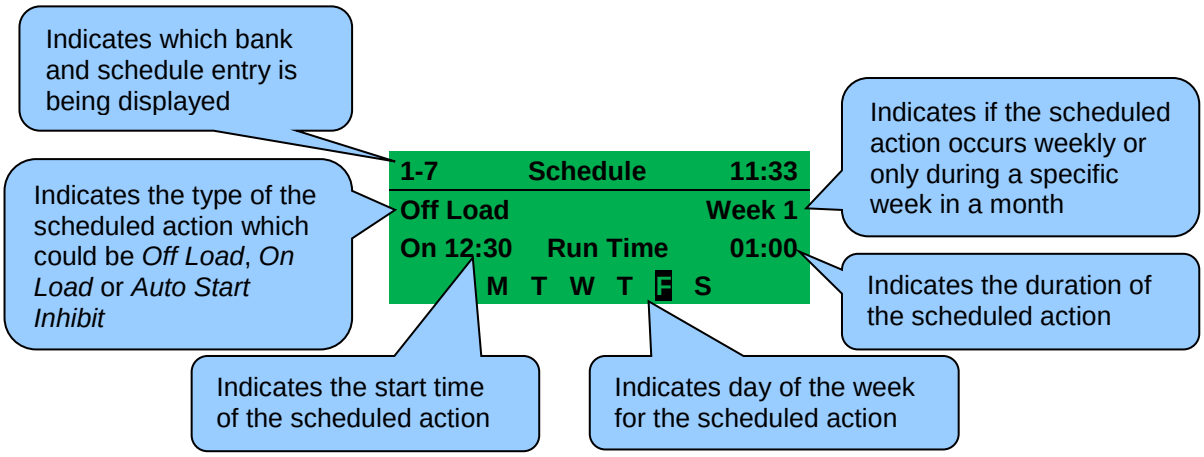

4.2.11 EDITOR

NOTE: Depending upon the module's configuration, some display screens may be disabled. For further details of module configuration, refer to DSE Publication: *057-238 DSE8610 MKII Configuration Suite PC Software Manual.*

Contains a selection of parameters selected by the system integrator that may be edited from the facia without having to enter the module's *Front Panel Editor* (no PIN required).

Press the ***Instrumentation Scroll*** buttons scroll through the ***Editor*** parameters if configured.

4.2.12 PLC INSTRUNMENTS

NOTE: Depending upon the module's configuration, some display screens may be disabled. For further details of module configuration, refer to DSE Publication: *057-238 DSE8610 MKII Configuration Suite PC Software Manual.*

Contains values from various elements from the module's internal PLC editor to enable the user to view them from the module's facia.

Press the ***Instrumentation Scroll***  buttons scroll through the ***PLC Instruments*** parameters if configured.

Counter Example:

PLC Instruments	
Counter 1	
Actual	5
Set Point	15

Counter 1: The name of the counter as configured in the PLC.
Actual: The number the counter has currently reached.
Set Point: The number at which the counter stops incrementing

Register Example:

PLC Instruments
Register 1
58

Register 1: The name of the register as configured in the PLC.
Value: The value the register currently contains.

Store Example:

PLC Instruments
Store 1
127

Store: The name of the store as configured in the PLC.
Value: The value the store currently contains. This value can be edited from the fascia by pressing and holding the ***Tick*** ***and then using the Instrumentation Scroll*** button to change the value.

Timer Example:

PLC Instruments	
Timer 1	
Actual	00:34:17
Set Point	01:50:30

Timer 1: The name of the timer as configured in the PLC.
Actual: The time the timer has currently reached.
Set Point: The time at which the timer stops incrementing

4.2.13 CONFIGURABLE CAN

NOTE: Depending upon the module's configuration, some display screens may be disabled. For further details of module configuration, refer to DSE Publication: 057-238 *DSE8610 MKII Configuration Suite PC Software Manual.*

The configurable CAN instruments are intended to display CAN information from external third-party CAN devices such as fuel flow meters. The contents of these screens vary depending upon configuration by the engine manufacturer or supplier.

Under default factory settings the configurable CAN instruments are not viewable. They are configurable by the system designer using the DSE Configuration Suite software.

Example:

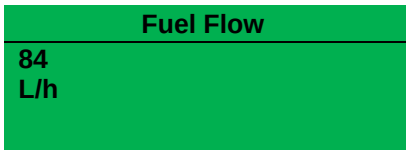

- Configurable CAN Instrument 1 to 30

4.2.14 MISCELLANEOUS

4.2.14.1 DATA LOGGING

Whilst in the 'ABOUT' section, press ***Scroll Down***  button to access more information about the data logging settings.

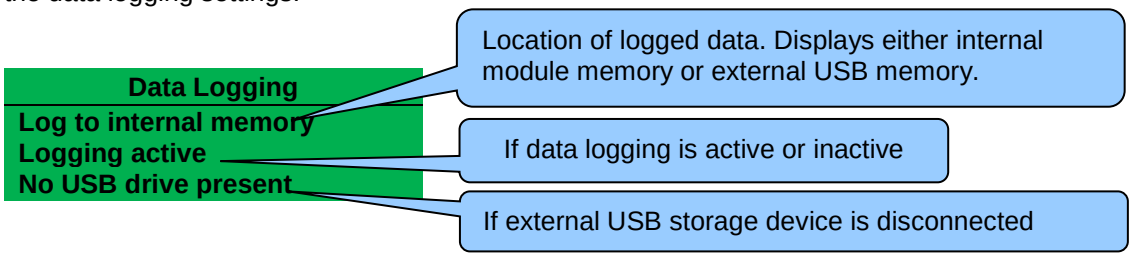

Inserting a USB storage device to the USB host connector on the rear of the module displays the following change to the page.

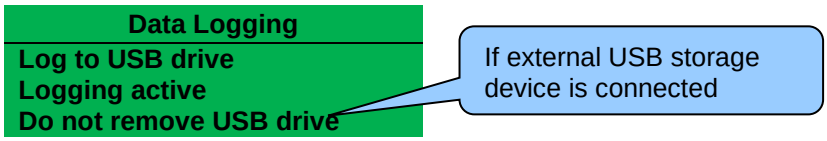

Press ***Scroll Down***  button to view the next page.

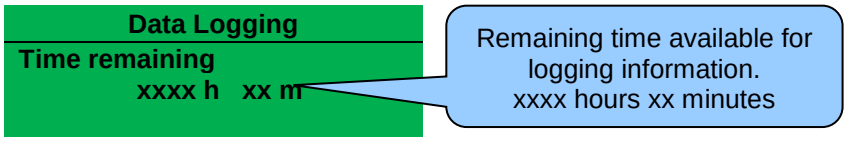

Press ***Scroll Down***  button to view the next page.

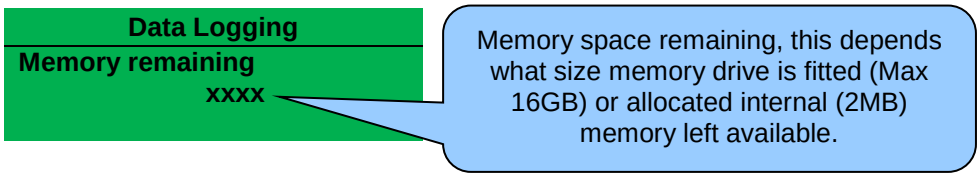

<u>USB Eject Procedure</u>

NOTE: Removal of the USB drive MUST only be carried out using the following method.

Press and hold the ***Tick***  button until "*Ok to remove USB drive*" is displayed.

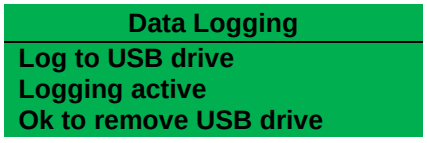

It is now safe to remove the USB drive.
This ensures the logging data file saves to memory complete and does not become corrupt.

4.2.15 ABOUT

Contains important information about the module and the firmware versions. This information may be asked for when contacting DSE Technical Support Department for advice.

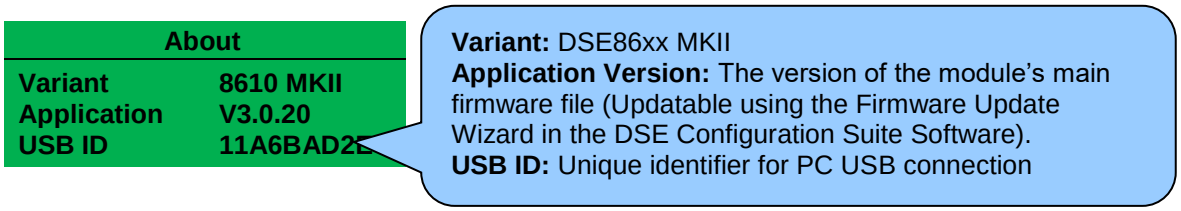

Press the ***Scroll Down***  button to access more information about the module.

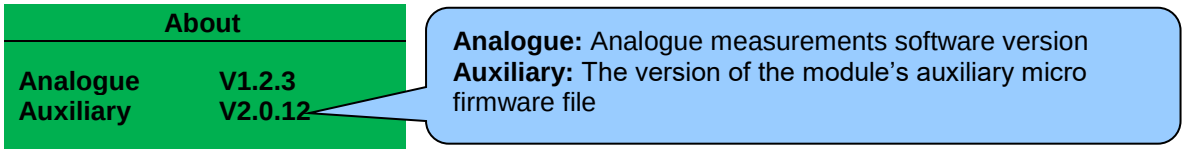

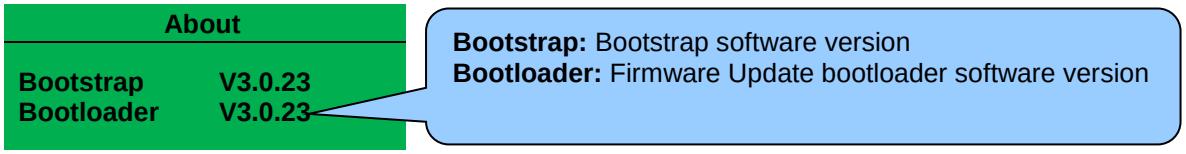

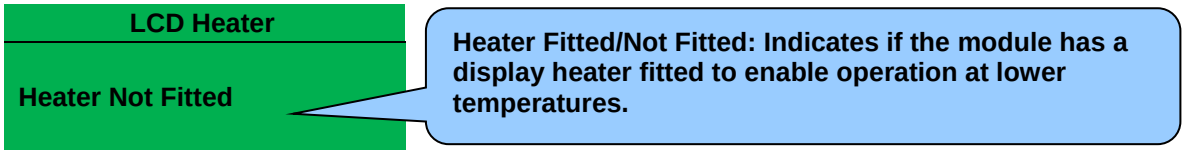

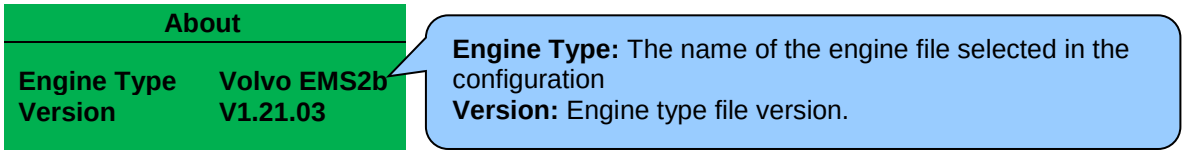

4.3 USER CONFIGURABLE INDICATORS

These LEDs are configured by the user to indicate any one of ***100+ different functions*** based around the following:

Indications - Monitoring of a digital input and indicating associated functioning user's equipment - *Such as Battery Charger On or Louvres Open, etc*.

Warnings, Electrical Trips & Shutdowns Alarms - Specific indication of a particular warning or shutdown condition, backed up by LCD indication - *Such as Low Oil Pressure Shutdown, Low Coolant level, etc.*

Status Indications - Indication of specific functions or sequences derived from the modules operating state - *Such as Safety On, Pre-heating, Panel Locked, etc.*



5 OPERATION

NOTE: The following descriptions detail the sequences followed by a module containing the standard 'factory configuration'. Always refer to your configuration source for the exact sequences and timers observed by any particular module in the field.

5.1 QUICKSTART GUIDE

This section provides a quick start guide to the module's operation.

5.1.1 STARTING THE ENGINE

NOTE: For further details, see the section entitled *Operation* elsewhere in this document.



5.1.2 STOPPING THE ENGINE

NOTE: For further details, see the section entitled *Operation* elsewhere in this document.



5.2 STOP/RESET MODE

NOTE: If a digital input configured to *Panel Lock* is active, changing module modes is not possible. Viewing the instruments and event logs is NOT affected by *Panel Lock*.

NOTE: For further details of module configuration, refer to DSE Publication: 057-238 *DSE8610 MKII Configuration Suite PC Software Manual.*

Stop/Reset Mode is activated by pressing the ***Stop/Reset Mode*** button.

The LED above the ***Stop/Reset Mode*** button illuminates to indicate ***Stop/Reset Mode*** operation.

In ***Stop/Reset Mode***, the module removes the generator from load (if necessary) before stopping the generator.

If the generator does not stop when requested, the *Fail To Stop* alarm is activated (subject to the setting of the *Fail to Stop* timer). To detect the engine at rest the following must occur:

- Engine speed is zero as detected by the CAN ECU
- Generator AC Voltage and Frequency must be zero.
- Engine Charge Alternator Voltage must be zero.
- Oil pressure sensor must indicate low oil pressure

When the engine has stopped and the module is in the ***Stop/Reset Mode***, it is possible to send configuration files to the module from DSE Configuration Suite PC software and to enter the Front Panel Editor to change parameters.

Any latched alarms that have been cleared are reset when ***Stop/Reset Mode*** is entered.

The engine is not started when in ***Stop/Reset Mode***. If start signals are given, the input is ignored until ***Auto Mode*** is entered.

When left in ***Stop/Reset Mode*** with no presses of the fascia buttons, no form of communication active and configured for *Power Save Mode,* the module enters *Power Save Mode*. To 'wake' the module, press any fascia control buttons.

Power Save Mode in the DSE Configuration Suite Software



5.2.1 ECU OVERRIDE

Pressing the ***Start*** button in ***Stop/Reset Mode*** powers up the engine's ECU but does not start the engine. This can be used to check the status of the CAN communication and to prime the fuel system.

5.3 MANUAL MODE

NOTE: If a digital input configured to Panel Lock is active, changing module modes is not possible. Viewing the instruments and event logs is NOT affected by panel lock.

Manual Mode is activated by pressing the ***Manual Mode*** button.
The LED above the ***Manual Mode*** button illuminates to indicate ***Manual Mode*** operations.

In ***Manual Mode*** the generator does not start automatically
To begin the starting sequence, press the ***Start*** button.

5.3.1 STARTING SEQUENCE

NOTE: There is no *Start Delay* in this mode of operation.

NOTE: If the unit has been configured for CAN, compatible ECU's receives the start command via CAN.

NOTE: For further details of module configuration, refer to DSE Publication: 057-238 *DSE8610 MKII Configuration Suite PC Software Manual.*

The fuel relay is energised and the engine is cranked.

If the engine fails to fire during this cranking attempt then the starter motor is disengaged for the *Crank Rest Timer* duration after which the next start attempt is made. Should this sequence continue beyond the set *Number Of Attempts*, the start sequence is terminated and the display shows *Fail to Start.*

The starter motor is disengaged when the engine fires. Speed detection is factory configured to be derived from the AC alternator output frequency, but can additionally be measured from a Magnetic Pickup mounted on the flywheel or from the CANbus link to the engine ECU depending on module configuration.

Additionally, rising oil pressure can be used to disconnect the starter motor (but cannot detect underspeed or overspeed).

After the starter motor has disengaged, the *Safety On Delay* timer activates, allowing Oil Pressure, High Engine Temperature, Under-speed, Charge Fail and any delayed Auxiliary fault inputs to stabilise without triggering the fault.

5.3.2 ENGINE RUNNING

NOTE: The load transfer signal remains inactive until the generator is available. This prevents excessive wear on the engine and alternator.

In ***Manual Mode*** , the generator does not synchronise and close its load switch unless a 'loading request' is made.
A loading request can come from a number of sources.

- Press the ***Close Generator*** button.
- With *Manual Breaker Control* disabled, the following loading requests take effect.

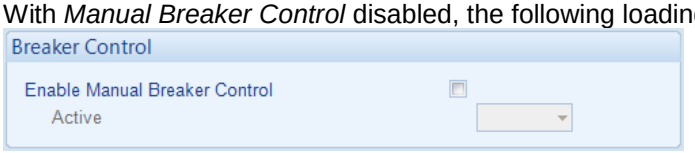

  - Activation of the inbuilt exercise scheduler if configured for 'on load' runs.
  - Activation of an auxiliary input that has been configured to *Remote Start On Load* or *Remote Start On Load Demand*
  - Request from a DSExx60 or from another DSExx10 controller over the MSC link.
  - Instruction from external remote telemetry devices using the RS232, RS485 or Ethernet interface.

Once the generator has been instructed to synchronise and placed on load, it is not automatically removed. To instruct the generator to ramp its load off and open its load switch, ensure none of the loading requests are active or have *Manual Breaker Control* enabled and either:

- Press the ***Open Generator***
- Press the ***Auto Mode*** button to return to automatic mode. The set observes all ***Auto Mode*** start requests and stopping timers before beginning the *Auto Mode Stopping Sequence*.
- Press the ***Stop/Reset Mode*** button to remove load and stop the generator.
- Activation of an auxiliary input that has been configured to *Generator Load Inhibit (no ramping occurs).*

5.3.3 STOPPING SEQUENCE

In ***Manual Mode*** the set continues to run until either:

- The ***Stop/Reset Mode*** button is pressed – The delayed load outputs are de-activated immediately and the set immediately stops.
- The ***Auto Mode*** button is pressed. The set observes all ***Auto Mode*** start requests and stopping timers before beginning the *Auto Mode Stopping Sequence*.

5.4 AUTOMATIC MODE

NOTE: If a digital input configured to external *Panel Pock* is active, changing module modes is not possible. Viewing the instruments and event logs is NOT affected by *Panel Lock*.

Auto Mode is activated by pressing the ***Auto Mode*** button.
The LED above the ***Auto Mode*** button illuminates to indicate ***Auto Mode*** operations.

Auto Mode allows the generator to operate fully automatically, starting and stopping as required with no user intervention.

5.4.1 WAITING IN AUTO MODE

If a starting request is made, the starting sequence begins.
Starting requests can be from the following sources:

- Activation of the inbuilt exercise scheduler.
- Activation of an auxiliary input that has been configured to *Remote Start On Load, Remote Start On Load Demand* or *Remote Start Off Load.*
- Request from a DSExx60 or from another DSExx10 controller over the MSC link.
- Instruction from external remote telemetry devices using the RS232, RS485 or Ethernet interface.

5.4.2 STARTING SEQUENCE

NOTE: If the unit has been configured for CAN, compatible ECU's receive the start command via CAN and transmit the engine speed to the DSE controller.

NOTE: For further details of module configuration, refer to DSE Publication: 057-238 *DSE8610 MKII Configuration Suite PC Software Manual.*

To allow for 'false' start requests, the *Start Delay* timer begins.

Should all start requests be removed during the *Start Delay* timer, the unit returns to a stand-by state.

If a start request is still present at the end of the *Start Delay* timer, the fuel relay is energised, and the engine is cranked.

If the engine fails to fire during this cranking attempt then the starter motor is disengaged for the *Crank Rest* duration after which the next start attempt is made. Should this sequence continue beyond the *Set Number Of Attempts*, the start sequence is terminated and the display shows *Fail to Start.*

The starter motor is disengaged when the engine fires. Speed detection is factory configured to be derived from the AC alternator output frequency, but can additionally be measured from a Magnetic Pickup mounted on the flywheel or from the CAN link to the engine ECU depending on module.

Additionally, rising oil pressure can be used to disconnect the starter motor (but cannot detect underspeed or overspeed).

After the starter motor has disengaged, the *Safety On Delay* timer activates, allowing Oil Pressure, High Engine Temperature, Under-speed, Charge Fail and any delayed Auxiliary fault inputs to stabilise without triggering the fault.

5.4.3 ENGINE RUNNING

NOTE: The load transfer signal remains inactive until the generator is available. This prevents excessive wear on the engine and alternator.

The generator synchronises to the bus and is placed on load if configured to do so.

If all start requests are removed, the *Stopping Sequence* begins.

5.4.4 STOPPING SEQUENCE

The *Return Delay* timer operates to ensure that the starting request has been permanently removed and isn't just a short-term removal. Should another start request be made during the cooling down period, the set returns on load.

If there are no starting requests at the end of the *Return Delay* timer, the generator ramps its load off and open its load switch, the *Cooling Down* timer is initiated.

The *Cooling Down* timer allows the set to run off load and cool sufficiently before being stopped. This is particularly important where turbo chargers are fitted to the engine.

After the *Cooling Down* timer has expired, the set is stopped.

5.5 PRIME POWER (LOAD SHARE)

5.5.1 ISOCHRONOUS

NOTE: For further details on *the Load Demand Scheme* (automatic starting/stopping of generators based on load), refer to section entitled *Load Demand Scheme* elsewhere in this document.

When generators are running in parallel isochronously (zero droop), the amount of power they produce to the load has to be controlled to ensure it is shared amongst them whilst still running at nominal frequency and voltage.

It is the job of the DSE8x10 to make precise changes to the amount of power supplied to the resistive element (*Active Power*) and capacitive/inductive element (*Reactive Power*) by each generator. The *Active Power* (kW) sharing is achieved by controlling the engine's governing system. This is done to alter the amount of fuel supplied to the engine and then monitor the amount of *Active Power* (kW) supplied by the generator. The *Reactive Power* (kvar) sharing is achieved by controlling the alternator's AVR. This is done to alter the amount of field excitation supplied to the alternator and then monitor the amount of *Reactive Power* (kvar) supplied by the generator.

The DSE8x10 controllers communicate with one another using the MSC link, passing information and instructions between themselves regarding the amount of power to produce. This information is also used to automatically bring in or drop off other generating sets as load changes using the *Load Demand Scheme.*

Whilst generators are in parallel, the DSE8x10 controllers instruct the generators to produce an equal percentage of the generators rating. In the example below, one generator is twice the size of the other though both generators as instructed to produce 80 % of their kW rating and 40 % of their kvar rating. This ensures that one generator is not being overworked, preventing excessive wear.

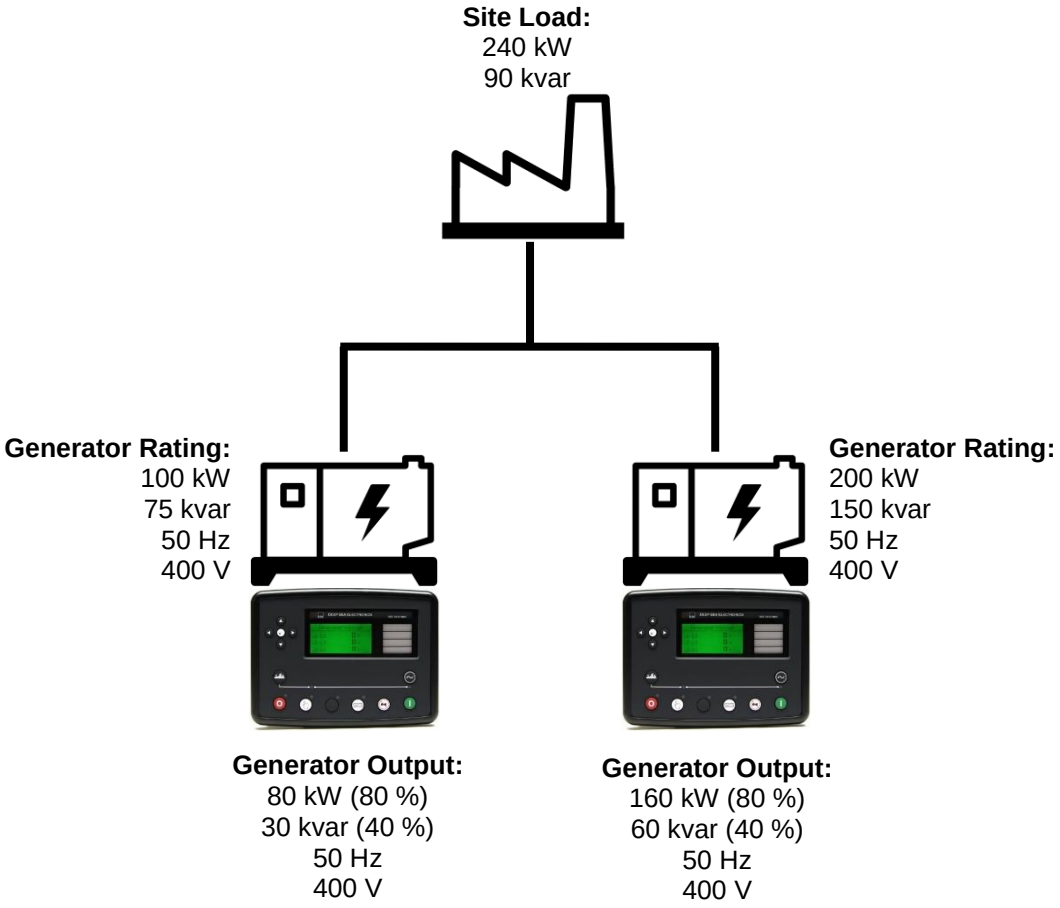

5.5.2 DROOP

NOTE: For further details on *the Load Demand Scheme* (automatic starting/stopping of generators based on load), refer to section entitled *Load Demand Scheme* elsewhere in this document.

NOTE: The *Frequency Droop* and *Voltage Droop* function within the module is not supported when using a DSExx60 module.

When generators are running in parallel in *Droop* only, the amount of power they produce to the load has to be controlled to ensure it is shared between the generators, by varying the frequency and voltage the system is running at.

It is the job of the DSE8x10's the *Droop* functions to minimise the generators power production using the configured *Droop Curve*. Typically, the *Droop Curve* on each generator is identical to ensure the generators are producing an even percentage of *Active Power* (kW) / *Reactive Power* (kvar), as they each try to produce the minimum power.

The *Active Power* (kW) sharing is achieved by the *Frequency Droop*. This is done by monitoring the *Active Power* (kW) the generator produces and altering the amount of fuel supplied to the engine to adjust the *Frequency* in accordance with the *Droop Curve*.

The *Reactive Power* (kvar) sharing is achieved by the *Voltage Droop*. This is done by monitoring the *Reactive Power* (kvar) the generator produces and altering the field excitation supplied to the alternator to adjust the *Voltage* in accordance with the *Droop Curve*.

Droop based load sharing is possible between generators/inverters that are not fitted with DSE modules that also have *Droop* enabled. However, the MSC link is still available to automatically bring in or drop off other DSE controlled generating sets as load changes using the *Load Demand Scheme*.

Whilst the generators are in parallel, the DSE8x10 controllers instruct the generators to run at a certain frequency/voltage dependant on the active power (kW)/reactive power (kvar) the generator is producing. In the example below, both generators have the same *Droop Curve* configured for the *Frequency Droop* and *Voltage Droop*. Even though one generator is twice the size of the other, both generators are producing 80 % of their kW rating at 50.5 Hz and 40 % of their kvar rating at 412 V. This occurred as the *Droop Curve* for the *Frequency Droop* and *Voltage Droop* was configured the same in both generators.

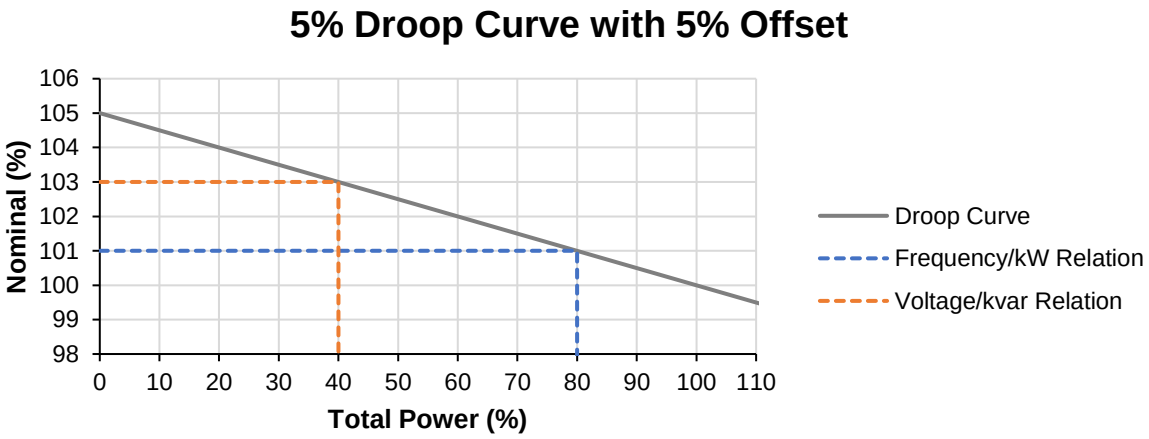

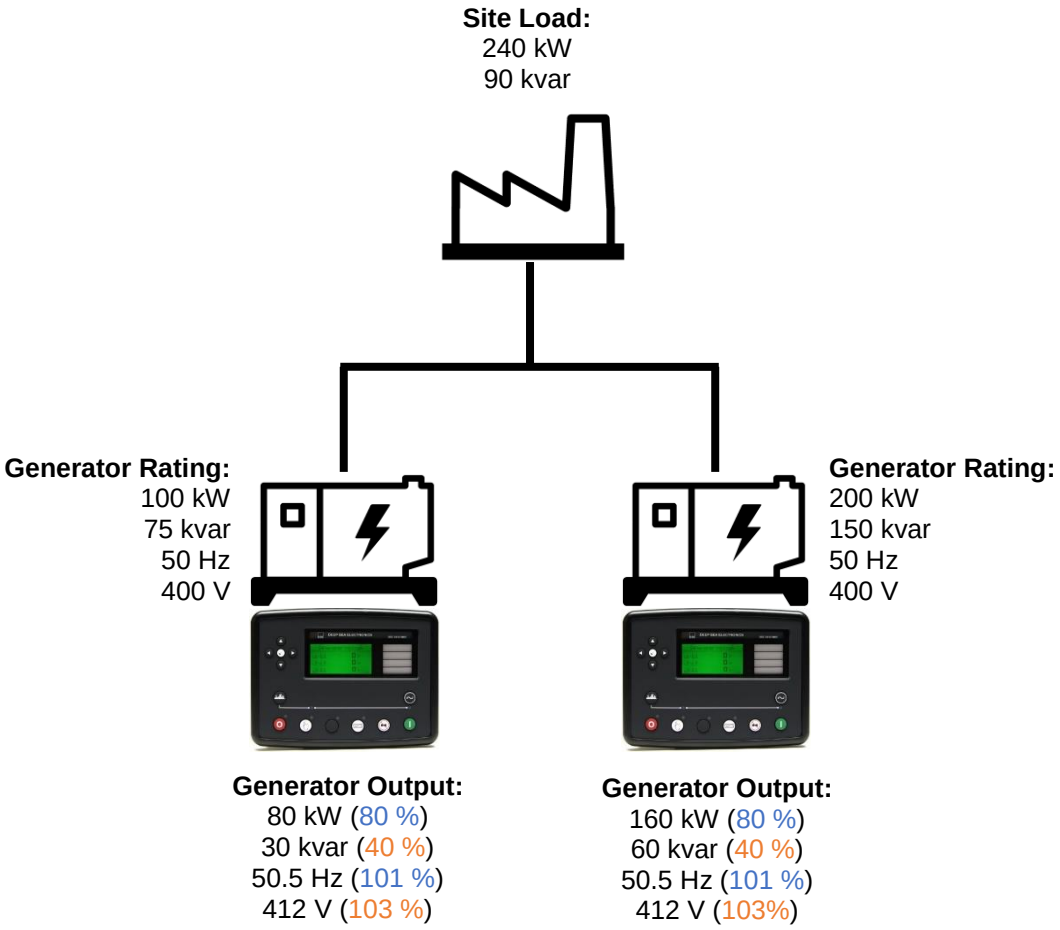

5.5.3 LOAD DEMAND SCHEME

NOTE: For further details on *the Load Demand Scheme*, refer to DSE Publication: 056-013 *Load Demand Scheme*

The module is included in the *Load Demand Scheme* by activating a digital input configured as *Remote Start on Load Demand.* Every DSExx10 module connected on the MSC link which is required to run in the *Load Demand Scheme* must have a digital input configured for *Remote Start on Load Demand* and it be activate. Having this input on each DSExx10 enables a specific generator to be taken out of the *Load Demand Scheme* for service for maintenance (by de-activating the input) whilst allowing the remainder of the system to operate.

Upon activation of the *Remote Start on Load Demand* input, all the generators in the system start. The first generator to become available closes onto the dead bus, communicating with the other generators to instruct them to synchronise onto the now live bus, before closing in parallel. If too much generator capacity is available to supply the load, the generators that are not required begin their *Return Delay* timers, after which they will ramp off the bus and stop.

Whilst one or more generators are already available in *Load Demand Scheme*, it may be required to make all the generators in the system available to provide power to the load. For instance, this may be necessary prior to switching on a large load that the currently available generators are not able to supply. To provide this function, a digital input on each DSExx10 module in the system must be configured to *Remote Start on Load*. Activating this input causes DSExx10 module to start its generator, synchronise with the bus, and close in parallel.

The generators continue to provide power until the *Remote Start on Load* input is de-activated. Providing the *Remote Start on Load Demand* input is still active on all the DSExx10 modules, the *Load Demand Scheme* ramps the un-required generators off the bus, depending upon the total load level.

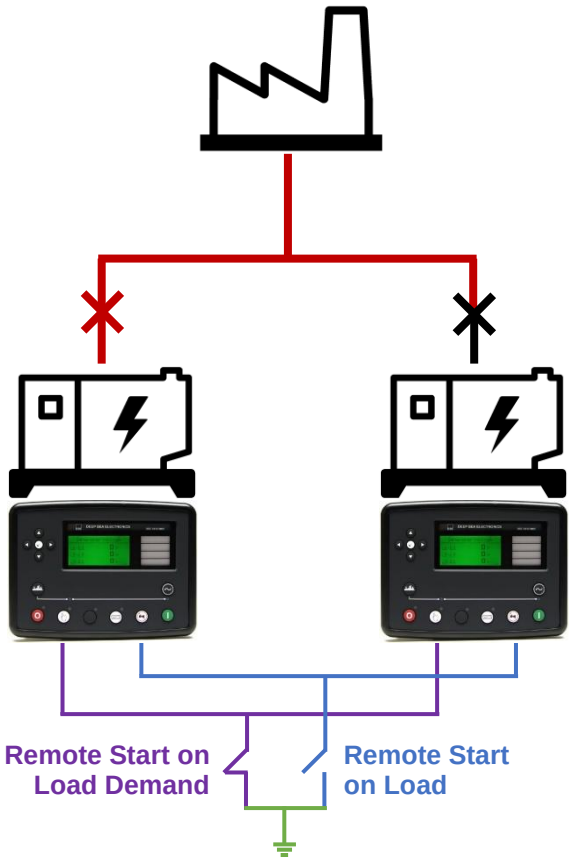

5.6 FIXED EXPORT (BASE LOAD)

NOTE: For further details on the fixed export (base load), refer to DSE Publication: *056-054 DSExx10 in Fixed Export* and see section entitled *Single Generator Exporting (Base Loading) Power* elsewhere in this document.

When a generator is running in parallel with the mains isochronously (zero droop), the amount of power it produces has to be controlled.

It is the job of the DSE8x10 to make precise changes to the amount *Active Power* (kW) and *Reactive Power* (kvar) produced by the generator. The *Active Power* (kW) regulation is achieved by controlling the engine's governing system. This is done to alter the amount of fuel supplied to the engine and then monitor the amount of *Active Power* (kW) produced by the generator. The *Reactive Power* (kvar) regulation is achieved by controlling the alternator's AVR. This is done to alter the amount of field excitation supplied to the alternator and then monitor the amount of *Reactive Power* (kvar) supplied by the generator.

The DSE8x10 knows it is going to parallel with a mains supply due to a digital input configured for *Mains Parallel Mode* being active. This same input is also used to enable the *Mains Decoupling (ROCOF* and *Vector Shift)* protections once the generator load switch has closed.

When the generator is paralleled to the mains, the DSE8x10 controller instructs the generator to produce a pre-set percentage of the generators rating. This pre-set percentage is changeable whilst the generator is running via a multitude of different interfaces. In the example below, the generator is instructed to produce 80 % of its kW rating and 30 % of its kvar rating. This results in only 30 kW being exported to the Mains as the local site load consumes the majority of the power produced by the generator.

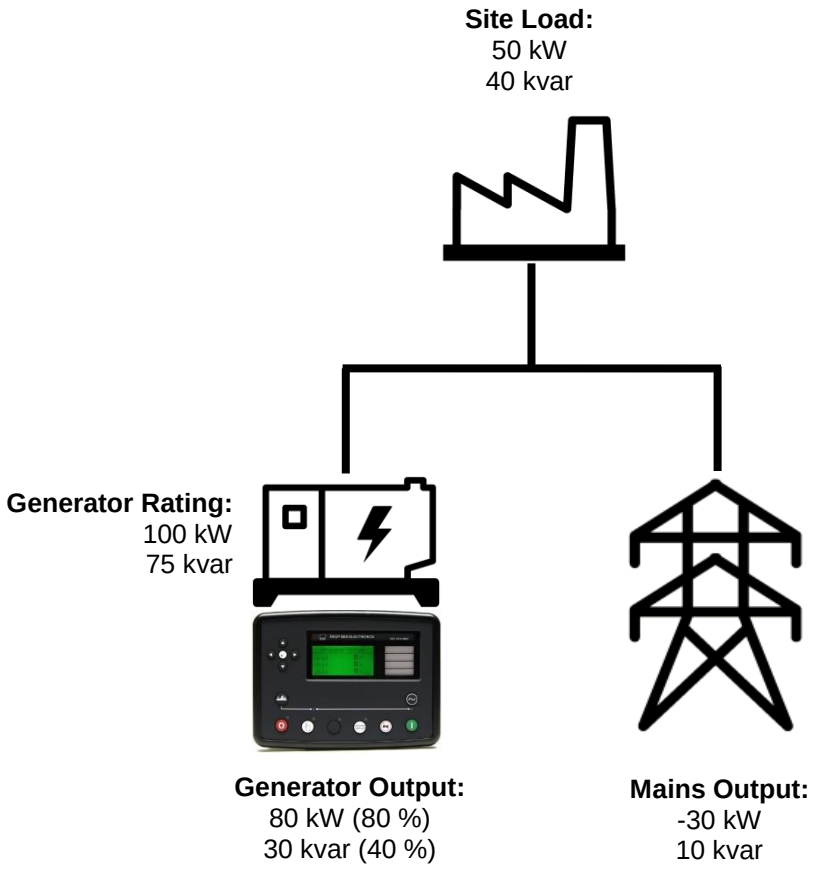

5.6.1 POWER MODES

NOTE: The *Frequency and Active Power Control* modes and *Voltage and Reactive Power Control* modes are to be used in conjunction with the following documents:
- COMMISSION REGULATION (EU) 2016/631 of 14 April 2016 establishing a network code on requirements for grid connection of generators
- P1547 - IEEE Draft Standard for Interconnection and Interoperability of Distributed Energy Resources with Associated Electric Power Systems Interfaces

NOTE: For further details of the configuration for the different power modes, refer to DSE Publication: *057-238 DSE8610 MKII Configuration Suite PC Software Manual.*

It is sometimes required that when a generator is placed in parallel with the mains, that it does not simply produced a fixed amount of *Active Power (kW)* or *Reactive Power (kvar)*. It may be required that the generator automatically varies the amount of *Active Power (kW)* or *Reactive Power (kvar)* to stabilise the localised Mains voltage and frequency. For these requirements, the DSE modules have the option to change the mode of operation whilst in parallel with the Mains.

5.6.1.1 FREQUENCY AND ACTIVE (KW) POWER MODES

Constant Active Power Mode (Default)

This is the default mode of exporting power to the mains (utility); where the DSE load share controller holds the amount of active power produced at a constant level. The amount of active power produced by the generator is irrespective of the load level or any other parameter.
The amount of power produced is defined as *Maximum kW Level* and is set using either the *DSE Configuration Suite PC Software*, *Front Panel Running Editor*, in PLC Functions, or via Modbus messages.

Frequency - Active Power Mode

In this mode of exporting power to the mains (utility); the DSE load share controller varies the amount of active power produced with regards to the *Control Curve* depending on the measured mains (utility) frequency.
This mode allows the generator to support the mains (utility) frequency stability by monitoring the frequency and changing the amount of active power produced.

Voltage – Active Power Mode

In this mode of exporting power to the mains (utility); the DSE load share controller varies the amount of active power produced with regards to the *Control Curve* depending on the measured mains (utility) voltage.
This mode allows the generator to support the mains (utility) voltage stability by monitoring the voltage and changing the amount of active power produced.

5.6.1.2 VOLTAGE AND REACTIVE (KVAR) POWER CONTROL

Constant Reactive Power Mode (Default)

This is the default mode of exporting power to the mains (utility); where the DSE load share controller holds the amount of reactive power produced at a constant level. The amount of reactive power produced by the generator is irrespective of the load level or any other parameter.
The amount of reactive power produced is defined as *Maximum kVAr Level* and is set using either the *DSE Configuration Suite PC Software*, *Front Panel Running Editor*, in PLC Functions, or via Modbus messages.

The user has the option to limit the amount of reactive power the generator produces to within their power factor depending on the amount of active power produced. Regardless of this option, the generator does not produce more than its rated reactive power.

Constant Power Factor Mode

In this mode of exporting power to the mains (utility); the DSE load share controller varies the amount of reactive power produced with regards to maintaining the required power factor.
This mode allows the generator to maintain a constant export power factor if so required.
The required power factor is set using either the *DSE Configuration Suite PC Software*, *Front Panel Running Editor*, in PLC Functions, or via Modbus messages.

Voltage - Reactive Power Mode

In this mode of exporting power to the mains (utility); the DSE load share controller varies the amount of reactive power produced with regards to the *Control Curve* depending on the measured voltage.
This mode allows the generator to support the mains (utility) voltage stability by monitoring the voltage and changing the amount of reactive power produced.

Power - Power Factor Mode

In this mode of exporting power to the mains (utility); the DSE load share controller varies the amount of reactive power produced with regards to maintaining the required power factor. This power factor is derived from the averaged power using the *Control Curve.*
This mode allows the generator to support the mains (utility) stability by varying the power factor depending on the produced active power.

5.7 SCHEDULER

The controller contains an inbuilt exercise run scheduler, capable of automatically starting and stopping the set or inhibiting the set from starting. Up to 16 scheduled (in two banks of 8) start/stop/inhibiting start sequences can be configured to repeat on a 7-day or 28-day cycle.

Scheduled runs may be on load or off load depending upon module configuration.

Example:

Screen capture from DSE Configuration Suite Software showing the configuration of the Exercise Scheduler.

In this example the set starts at 09:00 on Monday and run for 5 hours off load, then start at 13:30 on Tuesday and run for 30 minutes one load and is inhibited from automatically starting on Monday from 17:00 for 12 hours.

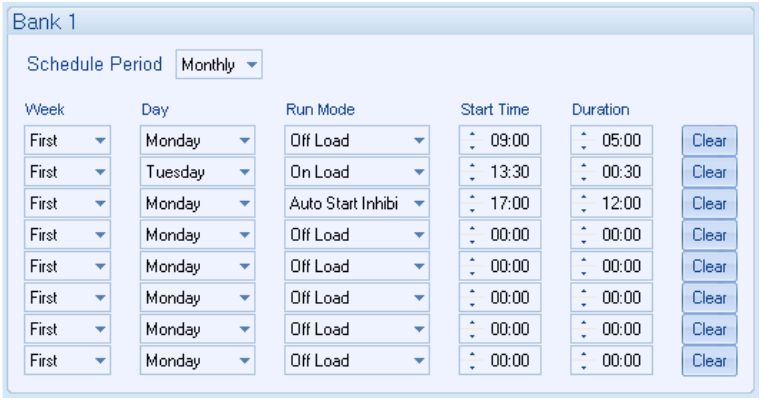

5.7.1 STOP MODE

- Scheduled runs do not occur when the module is in ***Stop/Reset Mode*** .

5.7.2 MANUAL MODE

- Scheduled runs do not occur when the module is in ***Manual Mode*** waiting for a start request.
- Activation of a Scheduled Run 'On Load' when the module is operating Off Load in ***Manual Mode*** forces the set to run On Load.

5.7.3 AUTO MODE

- Scheduled runs operate only if the module is in ***Auto Mode*** with no *Shutdown* or *Electrical Trip* alarm active.
- If the module is in ***Stop/Reset Mode*** or ***Manual Mode*** when a scheduled run begins, the engine is not started. However, if the module is moved into ***Auto Mode*** during a scheduled run, the engine is called to start.
- Depending upon configuration by the system designer, an external input can be used to inhibit a scheduled run.
- If the engine is running *Off Load* in ***Auto Mode*** and a scheduled run configured to 'On Load' begins, the set is placed *On Load* for the duration of the Schedule.

5.8 MSC COMPATIBILITY MODE

NOTE: These settings enable the interface between the DSE86xx MKII controllers and the legacy DSE55xx and DSE75xx controllers.

Parameter	Description
MSC Compatibility	**NOTE: The DSE5560 and DSE7560 are not compatible with the DSE8660 MKII, only one type of DSExx60 can be connected on the MSC at any time (DSE5560/DSE7560 OR DSE8660 MKII).** ☐ = The DSE86xx MKII is not be able to communicate with the DSE55xx and DSE75xx series modules on the MSC Link. ☑ = Communication between DSE86xx MKII and DSE55xx/DSE75xx is enabled. The maximum number of DSExx10 controllers is reduced to 16 and the maximum number of DSExx60 controllers is reduced to 8.
P123 Ramp Enabled	**NOTE: The P123 is only available for DSExx10 MKII modules.** ☐ = The DSE8610 MKII uses MSC link for connection to other DSE modules for ramping and load sharing. ☑ = The DSE8610 MKII is connected to a DSE123 to convert the MSC link into Analogue Load Share lines interface.
P123 Frequency Trip	**(Only Available when P123 Ramp option is enabled)** If the frequency changes by this amount when ramping down, the module opens the generator breaker.

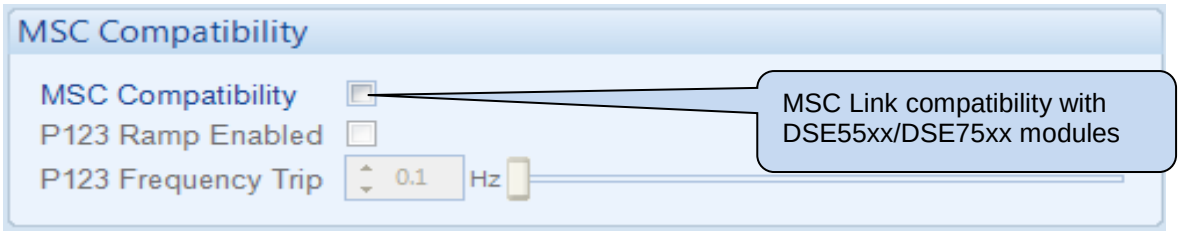

5.9 ALTERNATIVE CONFIGURATIONS

Depending upon the configuration of the system by the generator supplier, the system may have selectable configurations (for example to select between 50 Hz and 60 Hz). If this has been enabled the generator supplier will advise how this selection can be made (usually by operating an external selector switch or by selecting the required configuration file in the module's front panel configuration editor).

5.10 DUMMY LOAD / LOAD SHEDDING CONTROL

If the load is low, 'dummy loads' (typically resistive load banks) are introduced to ensure the engine is not too lightly loaded. Conversely, as the load increases towards the maximum rating of the set, non-essential loads are shed to prevent overload of the generator.

5.10.1 DUMMY LOAD CONTROL

The *Dummy Load Control* feature (if enabled) allows for a maximum of five dummy load steps. When the set is first started, all configured *Dummy Load Control* outputs are de-energised. Once the generator is placed onto load, the generator loading is monitored by the *Dummy Load Control* scheme.

If the generator loading falls below the *Dummy Load Control Trip* setting (kW), the *Dummy Load Control Trip Delay* begins. If the generator loading remains at this low level for the duration of the timer, the first *Dummy Load Control* output is energised. This is used to energise external circuits to switch in a resistive load bank.

The first dummy load has increased the generator loading. Again, the generator loading is monitored. This continues until all configured *Dummy Load Control* outputs are energised.

When the generator loading rises above the *Dummy Load Return* level, the *Dummy Load Return Delay* begins. If the generator loading remains at these levels after the completion of the timer, the 'highest' active *Dummy Load Control* output is de-energised. This continues until all *Dummy Load Control* outputs have been de-energised.

When the generator enters a stopping sequence for any reason, all the *Dummy Load Control* outputs de-energise at the same time as the generator load switch is signalled to open.

Example screen shot of *Dummy Load Control* setup in the DSE Configuration Suite

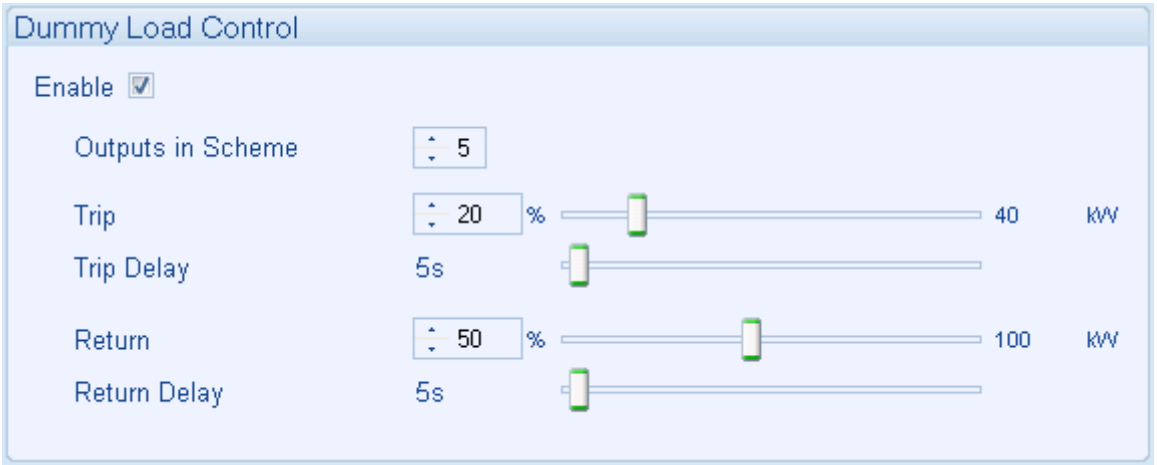

5.10.2 LOAD SHEDDING CONTROL

The *Load Shedding Control* feature (if enabled) allows for a maximum of five load shedding steps. When the generator is about to take load, the configured number of *Load Shedding Control Outputs at Start* will energise. This allows certain none-essential loads to be removed prior to the generator's load switch being closed. This is used to ensure the initial loading of the generator is kept to a minimum, below the *Load Acceptance* specification of the generator.

The generator is then placed on load. The *Load Shedding Control* scheme begins.
When the generator loading exceeds the *Load Shedding Trip* level the *Trip Delay* timer will start. If the generator loading is still high when the timer expires, the first *Load shedding Control* output energises. When the generator loading been above the trip level for the duration of the timer the 'next' *Load Shedding Control* output energises and so on until all *Load Shedding Control* outputs are energised.

When the generator loading falls below the *Load Shedding Return* level, the *Return Delay Time* starts. If the generator load remains below the *Load Shedding Return* level when the timer has expired, the 'highest' *Load Shedding Control* output de-energises. This process continues until all outputs have been de-energised.

When the generator enters a stopping sequence for any reason, all the *Load Shedding Control* outputs de-energise at the same time as the generator load switch is signalled to open.

Example screen shot of *Load Shedding Control* setup in the DSE Configuration Suite:

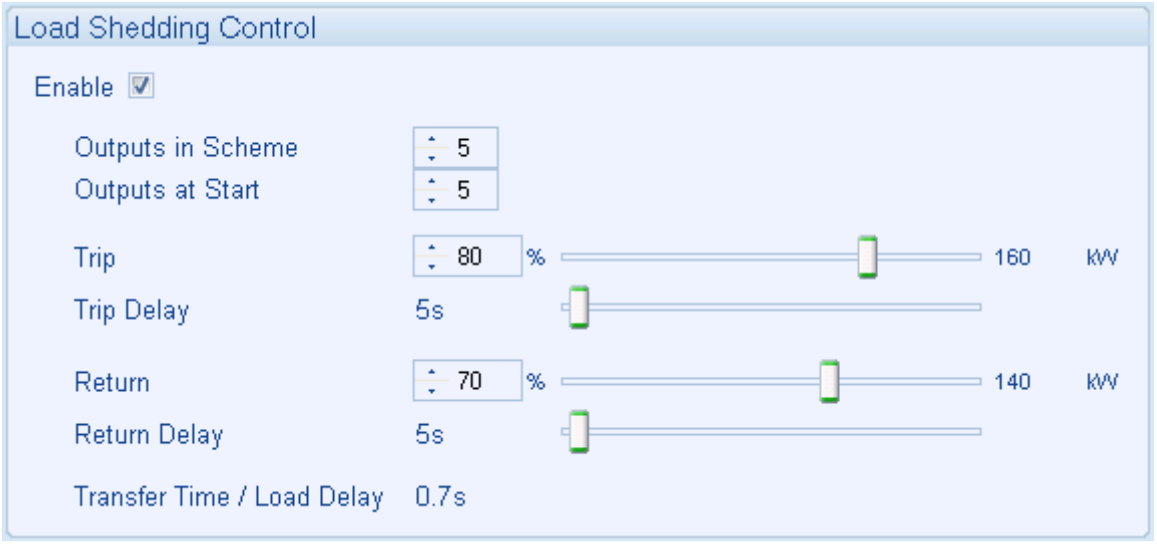

5.11 SMS CONTROL

The *SMS Control* feature (if enabled) allows the user to send control commands to the module via SMS message. There are five control commands that the user is able to send to the module shown in the table below.

NOTE: Multiple SMS Control Commands CANNOT be sent in a single SMS message.

Control Command Number	Module Action
1	Start the generator and run off load if the controller is in the ***Auto Mode*** .
2	Start the generator and run on load if the controller is in the ***Auto Mode*** .
3	Cancel the SMS start request leaving the module in its current operating mode.
4	Put the module into the ***Stop/Reset Mode*** .
5	Put the module into the ***Auto Mode*** .

To send an SMS command, the user requires (if configured) the *SMS Control Pin* and the *Control Command Number.* Only these numbers must be included in the SMS, the module does not respond to any SMS with extra characters or missing PIN (if configured). Below is an example showing how to start and run the generator on load by SMS message.

NOTE: There MUST be a space between the *SMS PIN* and the *Control Command Number*

PIN

Control Command Number

SMS Message 1
0123 5

This SMS message places the module into the ***Auto Mode*** .

SMS Message 2
0123 2

This SMS message will start generator and run it on load.

SMS Message 3
0123 3

This SMS message will remove the start and run command given by the previous SMS message and leave the module in the ***Auto Mode*** .

SMS Message 4
0123 4

This SMS message will place the module into the ***Stop/Reset Mode*** .

Example screenshot of *SMS Control* setup in the DSE Configuration Suite:

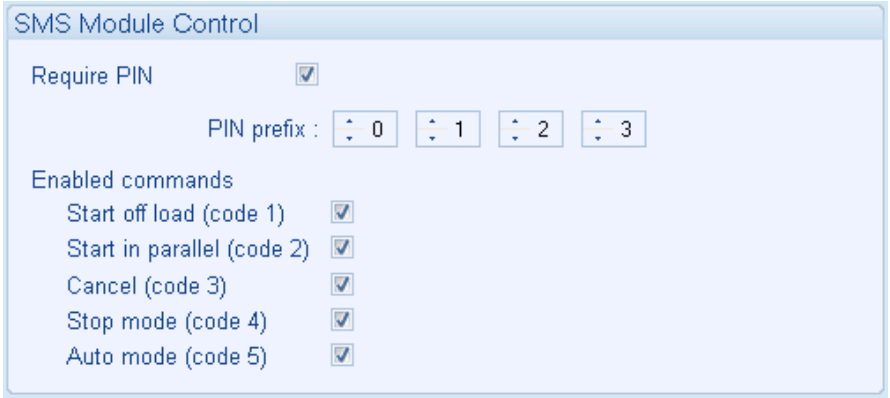

5.12 DEAD BUS SYNCHRONISING (AUTO MODE)

NOTE: For further details on Dead Bus Synchronising, refer to DSE Publication: 056-072 *Dead Bus Synchronising Training Document.*

5.12.1 BENEFIT OF SYSTEM

Generator set specifications often contain the requirement for the set to be on load within 15 seconds of a mains supply failure. This is easily achievable in single set applications. However, in the current era of fuel conservation, multiple sets are often used to provide the backup power solution for many applications. This gives challenges in starting and synchronising the required sets before they can be used to power the load.

The solution to this is a longstanding one, having been used for many decades. However modern digital communications such as the DSE MSC link has vastly improved the control and hence safety of the system operation. The solution is called *Dead Bus Synchronising*. Using *Dead Bus Synchronising*, any number of generators are able to be online and in parallel potentially within 15 seconds, depending upon applications and hardware used.

5.12.2 HARDWARE REQUIREMENTS

- DSE8610 MKII controller.
- DC controlled generator load switch.
- Auxiliary contact to feedback generator breaker status to the DSE controller.
- External relay driven by the DSE module to isolate the supply to the AVR inside the generator's alternator.
- Speed detection using an MPU or CAN signal.

5.12.3 OPERATION

Before the generator sets are started, their load switches are closed. As there is no AC supply the load switches must be DC controlled. Next, the alternator excitation field is disabled by isolating the supply to the AVRs. The engines are all started at the same time and allowed for the *Excitation Delay* timer to reach the desired operating speed. As there is no AC supply generated, frequency cannot be used to determine engine speed, hence the requirement for an MPU of CAN speed signal.

If the engines have attained the desired engine speed within the *Excitation Delay* timer, the AVR's power supply is reconnected, enabling the excitation field and load sharing begins. The MSC link is used to ensure all sets excite their alternators at exactly the same time. Any generators not up to speed before the end of the *Excitation Delay* timer are instructed to open their load switches. A short time later, these sets synchronise to the bus in the traditional manner.

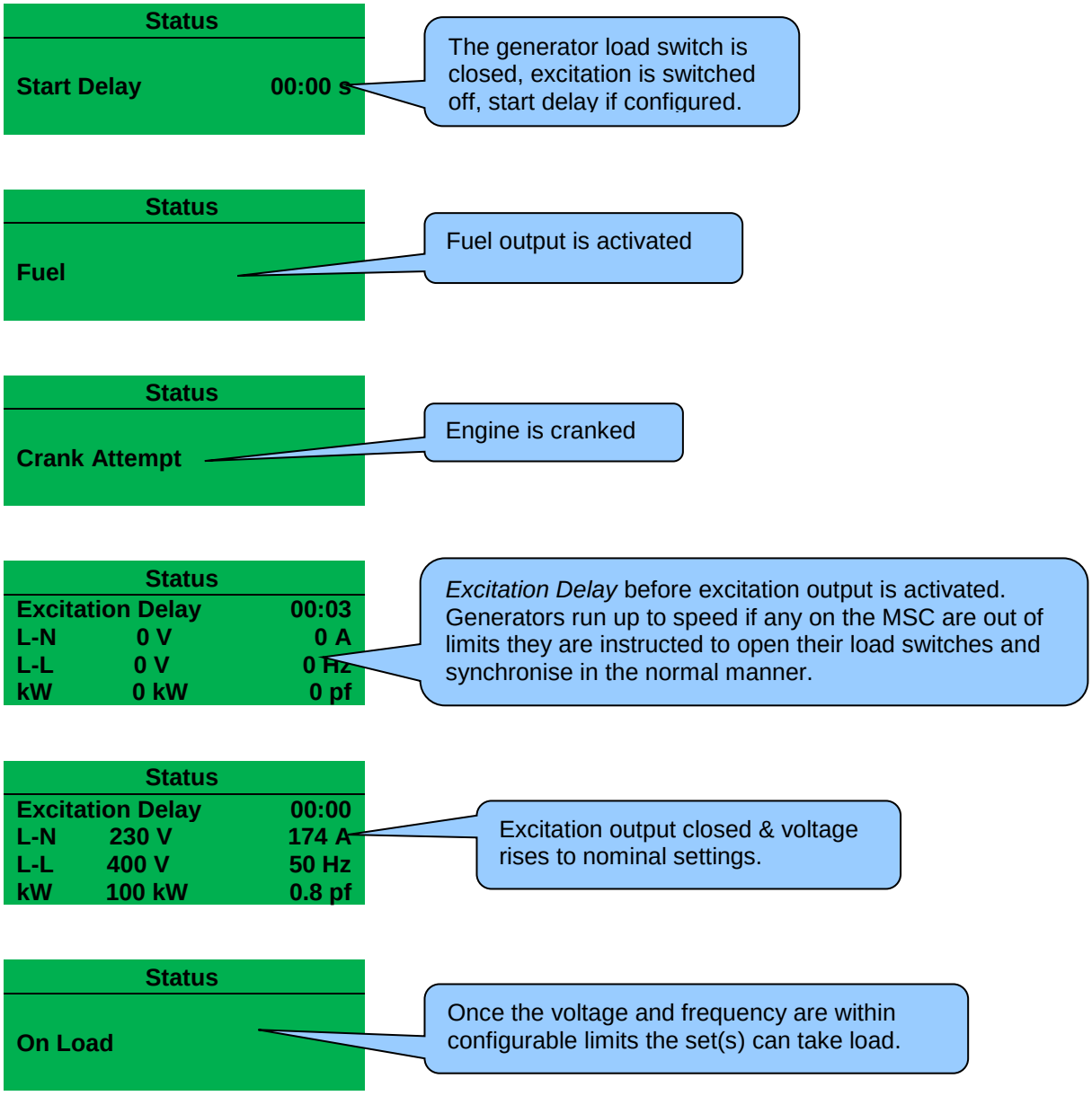

6 PROTECTIONS

6.1 ALARMS

When an alarm is active, the *Internal Audible Alarm* sounds and the *Common Alarm* output if configured, activates.

The audible alarm is silenced by pressing the ***Alarm Mute / Lamp Test*** button.

The LCD display jumps from the 'Information page' to display the Alarm Page

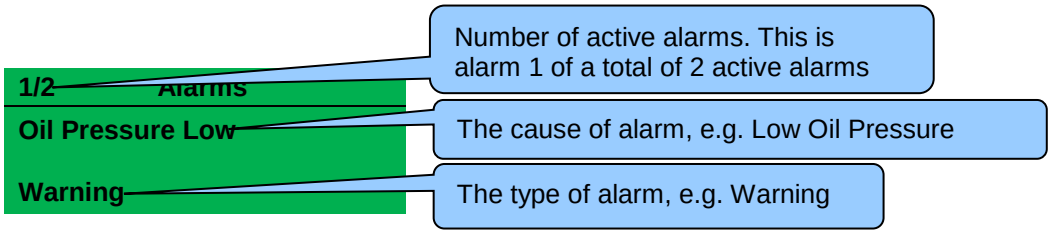

The LCD displays multiple alarms such as "*Coolant Temperature High*", "*Emergency Stop*" and "*Low Coolant Warning*". These automatically scroll in the order that they occurred or press the ***Instrumentation Scroll*** buttons to scroll through manually.

In the event of an alarm, the LCD displays the appropriate text. If an additional alarm then occurs, the module displays the appropriate text.

Example:

1/2 Alarms
Oil Pressure Low
Warning

2/2 Alarms
Coolant Temp High
Shutdown

6.1.1 PROTECTIONS DISABLED

Configuration is possible to prevent *Shutdown* and *Electrical Trip* alarms from stopping the generator. Under such conditions, *Protections Disabled* appears on the module display to inform the operator. *Shutdown* and *Electrical Trip* alarms still appear however, the operator is informed the alarms are blocked.

Example:

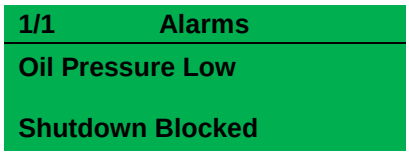

This feature is provided to assist the system designer in meeting specifications for *Warning Only, Protections Disabled*, *Run to Destruction*, *War Mode* or other similar wording.

When configuring this feature in the PC software, the system designer chooses to make the feature permanently active or only active upon operation of an external switch. The system designer provides this switch (not DSE) so its location varies depending upon manufacturer, however it normally takes the form of a key operated switch to prevent inadvertent activation. Depending upon configuration, a warning alarm may be generated when the switch is operated.

The feature is configurable in the PC configuration software for the module. Writing a configuration to the controller that has “Protections Disabled” configured, results in a warning message appearing on the PC screen for the user to acknowledge before the controller’s configuration is changed. This prevents inadvertent activation of the feature.

6.1.2 RESET ELECTRICAL TRIP

Configuration is possible to enable the operator to reset *Electrical Trip* alarm a configurable number of times before the generator has stopped. This is to allow the generator to go back on load without having to perform a cooling run first.

It is also possible to prevent an *Electrical Trip* alarm from stopping the generator. Under such conditions, the *Electrical Trip Stop Inhibited Warning* alarm appears on the module display to inform the operator. *Electrical Trip* alarms still appear however, the operator is just informed the generator is inhibited from stopping.

Example:

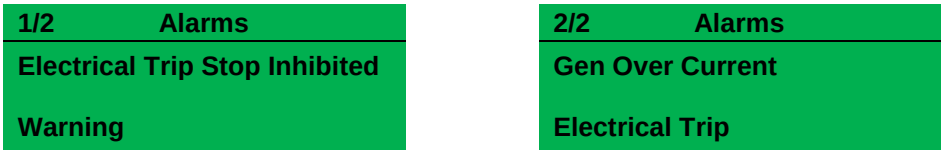

This feature is provided to assist the system designer in meeting specifications requirements to ensure the generator (if running) is able to take load again after the alarm has been reset. Depending upon configuration, the generator may go into a cooling run or be inhibited from stopping after the *Electrical Trip* alarm activates.

When configuring this feature in the PC software, the system designer chooses to make the *Electrical Trip* alarms resettable by using a switch connected to an input configured for *Reset Electrical Trip* and/or by pressing the ***Close Generator*** button. The system designer provides this switch (not DSE) so its location varies depending upon manufacturer, however it normally takes the form of a key operated switch to prevent inadvertent activation. If the DSE module is in the ***Manual Mode***, a further press of the ***Close Generator*** button is required to place the generator on load if no other on load request is active.

The feature is configurable in the PC configuration software for the module. Writing a configuration to the controller that has *Reset Electrical Trip* enabled, results in a warning message appearing on the PC screen for the user to acknowledge before the controller's configuration is changed. This prevents inadvertent activation of the feature.

6.1.3 ECU ALARMS (CAN FAULT CODES / DTC)

NOTE: For details on these code meanings, refer to the ECU instructions provided by the engine manufacturer, or contact the engine manufacturer for further assistance.

NOTE: For further details on connection to electronic engines, refer to DSE Publication: *057-004 Electronic Engines And DSE Wiring*

When connected to a suitable CAN engine, the controller displays alarm status messages from the ECU in the *Alarms* section of the display.

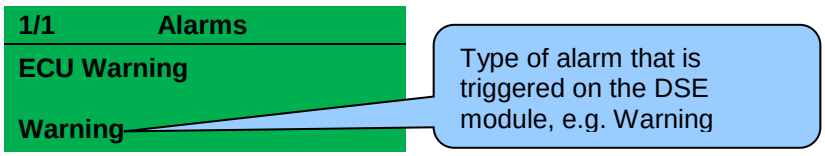

Press the ***Next Page***  button to access the list of *ECU Current DTCs* (Diagnostic Trouble Codes) from the ECU which are DM1 messages.

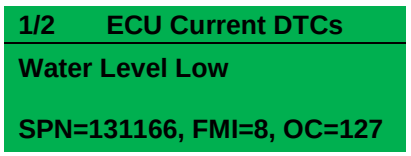

The DM1 DTC is interpreted by the module and is shown on the module's display as a text message. In addition to this, the manufacturer's DTC is shown below.

Press the ***Next Page***  button to access the list of *ECU Prev. DTCs* (Diagnostic Trouble Codes) from the ECU which are DM2 messages.

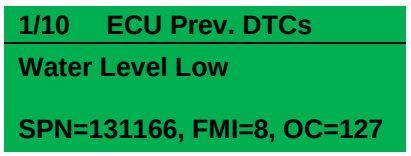

The DM2 DTC is interpreted by the module and is shown on the module's display as a text message. In addition to this, the manufacturer's DTC is shown below.

6.2 INDICATIONS

Indications are non-critical and often status conditions. They do not appear on the LCD display of the module as a text message in the *Status, Event Log* or *Alarms* pages. However, an output or LED indicator is configured to draw the operator's attention to the event.

Example:

- Input configured for indication.
- The LCD text does not appear on the module display but can be added in the configuration to remind the system designer what the input is used for.
- As the input is configured to *Indication* there is no alarm generated.
- LED Indicator 1 illuminates when Digital Input A is active.
- The Insert Card Text allows the system designer to print an insert card detailing the LED function.
- Example showing operation of the LED.

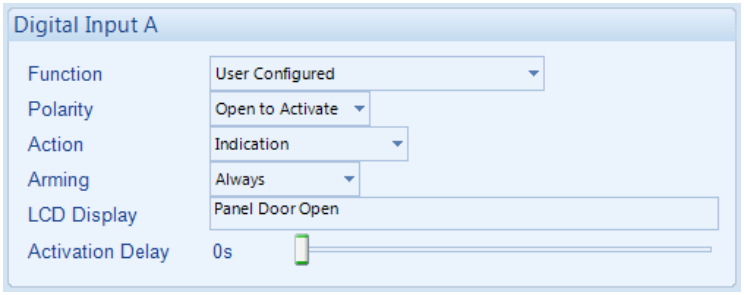

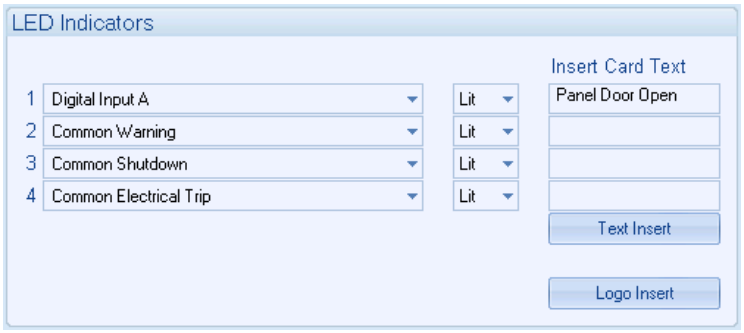



6.3 WARNING ALARMS

Warnings are non-critical alarm conditions and do not affect the operation of the engine system, they serve to draw the operator's attention to an undesirable condition.

Example:

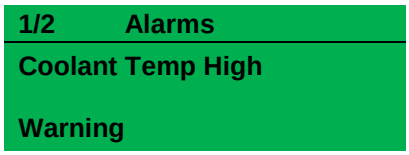

In the event of an alarm the LCD jumps to the alarms page and scroll through all active alarms.

By default, warning alarms are self-resetting when the fault condition is removed. However, enabling *All Warnings Are Latched* causes warning alarms to latch until reset manually. This is enabled using the DSE Configuration Suite in conjunction with a compatible PC.

If the module is configured for **CAN** and receives an "error" message from the ECU, 'ECU Warning" is shown on the module's display as a warning alarm.

Fault	Description
2130 ID 1 to 4 Analogue Input E to H High	**NOTE: Due to module configuration the alarm message that appears on the display may be different. For further details of module configuration, refer to DSE Publication: *057-238 DSE8610 MKII Configuration Suite PC Software Manual.*** The module detected that an analogue input value of a DSE2130 had risen above the *Flexible Sensor High Pre-Alarm Trip* level.
2130 ID 1 to 4 Analogue Input E to H Low	**NOTE: Due to module configuration the alarm message that appears on the display may be different. For further details of module configuration, refer to DSE Publication: *057-238 DSE8610 MKII Configuration Suite PC Software Manual.*** The module detected that an analogue input value of a DSE2130 had fallen below the *Flexible Sensor Low Pre-Alarm Trip* level.
2130 ID1 to 4 Digital Input A to H	**NOTE: Due to module configuration the alarm message that appears on the display may be different. For further details of module configuration, refer to DSE Publication: 057-238 DSE8610 MKII Configuration Suite PC Software Manual.** The module detected that a digital input configured to create a fault condition on a DSE2130 expansion module became active and the appropriate LCD message displayed.
2131 ID 1 to 4 Analogue Input A to J High	**NOTE: Due to module configuration the alarm message that appears on the display may be different. For further details of module configuration, refer to DSE Publication: 057-238 DSE8610 MKII Configuration Suite PC Software Manual.** The module detected that an analogue input value of a DSE2131 had risen above the *Flexible Sensor High Pre-Alarm Trip* level.

Continued over page…

Fault	Description
2131 ID 1 to 4 Analogue Input A to J Low	**NOTE: Due to module configuration the alarm message that appears on the display may be different. For further details of module configuration, refer to DSE Publication: *057-238 DSE8610 MKII Configuration Suite PC Software Manual.*** The module detected that an analogue input value of a DSE2131 had fallen below the *Flexible Sensor Low Pre-Alarm Trip* level.
2131 ID 1 to 4 Analogue Input A to J	**NOTE: Due to module configuration the alarm message that appears on the display may be different. For further details of module configuration, refer to DSE Publication: *057-238 DSE8610 MKII Configuration Suite PC Software Manual.*** The module detected that a digital input configured to create a fault condition on a DSE2131 expansion module became active and the appropriate LCD message displayed.
2133 ID 1 to 4 Analogue Input A to H High	**NOTE: Due to module configuration the alarm message that appears on the display may be different. For further details of module configuration, refer to DSE Publication: *057-238 DSE8610 MKII Configuration Suite PC Software Manual.*** The module detected that an analogue input value of a DSE2133 had risen above the *Flexible Sensor High Pre-Alarm Trip* level.
2133 ID 1 to 4 Analogue Input A to H Low	**NOTE: Due to module configuration the alarm message that appears on the display may be different. For further details of module configuration, refer to DSE Publication: *057-238 DSE8610 MKII Configuration Suite PC Software Manual.*** The module detected that an analogue input value of a DSE2133 had fallen below the *Flexible Sensor Low Pre-Alarm Trip* level.
Analogue Input A to D (Digital)	**NOTE: Due to module configuration the alarm message that appears on the display may be different. For further details of module configuration, refer to DSE Publication: 057-238 DSE8610 MKII Configuration Suite PC Software Manual.** The module detected that an analogue input configured as a digital input to create a fault condition became active and the appropriate LCD message is displayed.
Battery Detect Failure	The module detected that a battery charger connected by DSENet® had issued a *Battery Detect Failure* alarm.
Battery Failure Detection Output 1	The module detected that a battery charger connected by DSENet® had issued a *Battery Failure Detection* alarm on its Output 1.
Battery Failure Detection Output 2	The module detected that a battery charger connected by DSENet® had issued a *Battery Failure Detection* alarm on its Output 2.
Battery High Current Output 1	The module detected that a battery charger connected by DSENet® had issued a *Battery High Current* alarm on its Output 1.
Battery High Current Output 2	The module detected that a battery charger connected by DSENet® had issued a *Battery High Current* alarm on its Output 2.
Battery High Temperature Output 1	The module detected that a battery charger connected by DSENet® had issued a *Battery High Temperature* alarm on its Output 1.
Battery High Temperature Output 2	The module detected that a battery charger connected by DSENet® had issued a *Battery High Temperature* alarm on its Output 2.

Continued over page…

Fault	Description
Battery High Voltage Output 1	The module detected that a battery charger connected by DSENet® had issued a *Battery High Voltage* alarm on its Output 1.
Battery High Voltage Output 2	The module detected that a battery charger connected by DSENet® had issued a *Battery High Voltage* alarm on its Output 2.
Battery Low Voltage Output 1	The module detected that a battery charger connected by DSENet® had issued a *Battery Low Voltage* alarm on its Output 1.
Battery Low Voltage Output 2	The module detected that a battery charger connected by DSENet® had issued a *Battery Low Voltage* alarm on its Output 2.
Battery Temperature Sensor Fail Output 1	The module detected that a battery charger connected by DSENet® had issued a *Battery Temperature Fail* alarm on its Output 1.
Battery Temperature Sensor Fail Output 2	The module detected that a battery charger connected by DSENet® had issued a *Battery Temperature Fail* alarm on its Output 2.
AVR Maximum Trim Limit	The module's AVR output has reached its limit whilst attempting to control the generator to produce more kvars whilst in parallel. This indicates a fault with either the AVR (including connection error), setting of SW2, or that the alternator has reached its maximum capacity.
Battery High Voltage IEEE 37.2 – 59 DC Overvoltage Relay	The module detected that its DC supply voltage had risen above the *Plant Battery Overvolts Warning Trip* level for the configured delay timer.
Battery Low Voltage IEEE 37.2 – 27 DC Undervoltage Relay	The module detected that its DC supply voltage had fallen below the *Plant Battery Undervolts Warning Trip* level for the configured delay timer.
Calibration Fault	The module detected that its internal calibration has failed. The unit must be sent back to DSE to be investigated and repaired. Contact DSE Technical Support for more details.
Charge Alt Failure IEEE 37.2 – 27 DC Undervoltage Relay	The module detected that the output voltage of the charge alternator had fallen below the *Charge Alternator Warning Trip* level for the configured delay timer.
Charger Fan Locked	The module detected that a battery charger connected by DSENet® had a *Charger Failure* alarm.
Charger High Temperature	The module detected that a battery charger connected by DSENet® had a High Temperature alarm.
Charger Mains High Current	The module detected that a battery charger connected by DSENet® had a *Mains High Current* alarm.
Charger ID 0 to 3 Common Warning	**NOTE: Due to module configuration the alarm message that appears on the display may be different. For further details of module configuration, refer to DSE Publication: *057-238 DSE8610 MKII Configuration Suite PC Software Manual.*** The module detected that a battery charger connected by DSENet® had issued a *Common Warning Alarm*.
Charger Mains High Voltage	The module detected that a battery charger connected by DSENet® had a *Mains High Voltage* alarm.
Charger Mains Low Voltage	The module detected that a battery charger connected by DSENet® had a *Mains Low Voltage* alarm.
Charger Voltage Drop Charging Cable Output 1	The module detected that a battery charger connected by DSENet® had issued a *Voltage Drop Charging Cable* alarm on its Output 1.
Charger Voltage Drop Charging Cable Output 2	The module detected that a battery charger connected by DSENet® had issued a *Voltage Drop Charging Cable* alarm on its Output 2.
Coolant Temp High IEEE C37.2 – 26 Apparatus Thermal Device	The module detected that the engine coolant temperature had risen above the *High Coolant Temperature Pre-Alarm Trip* level after the *Safety On Delay* timer had expired.
DEF Level Low	The module received a fault condition from the engine ECU alerting about the DEF level.

Continued over page…

Fault	Description
Coolant Temp High IEEE C37.2 – 26 Apparatus Thermal Device	The module detected that the engine coolant temperature had risen above the *High Coolant Temperature Pre-Alarm Trip* level after the *Safety On Delay* timer had expired.
DEF Level Low	The module received a fault condition from the engine ECU alerting about the DEF level.
Digital Input A to L	**NOTE: Due to module configuration the alarm message that appears on the display may be different. For further details of module configuration, refer to DSE Publication: 057-238 DSE8610 MKII Configuration Suite PC Software Manual.** The module detected that a digital input configured to create a fault condition became active and the appropriate LCD message is displayed.
DPTC Filter	The module received a fault condition from the engine ECU alerting that the DPF/DPTC had activated.
Earth Fault IEEE C37.2 – 51G or 51N Generator IDMT Earth Fault Relay	**NOTE: For more details, see section entitled *Earth Fault IDMT Alarm* elsewhere in this document.** The module detected that the generator earth fault current had risen above the *Earth Fault Trip Level* for the duration of the IDMT function.
ECU Amber	The module received an amber fault condition from the engine ECU.
ECU Data Fail	The module is configured for CAN operation but has not detected data being sent from the engine's ECU.
ECU Malfunction.	The module received a malfunction fault condition from the engine ECU.
ECU Protect	The module received a protect fault condition from the engine ECU.
ECU Red	The module received a red fault condition from the engine ECU.
Electrical Trip Stop Inhibited	The module created an electrical trip alarm due to a fault, but the generator is prevented from stopping. This is due to the Reset Electrical Trip Inhibit Engine Stop being enabled. To stop the generator, remove the starting request or press the ***Stop/Reset Mode*** button.
Engine Over Speed Delayed IEEE C37.2 - 12 Overspeed Device	The module detected that the engine speed had risen above the *Over Speed Trip* level but was below the *Over Speed Overshoot Trip* for the configured *Overshoot Delay* timer during starting.
Engine Under Speed IEEE C37.2 - 14 Underspeed Device	The module detected that the engine speed had fallen below the *Under Speed Pre-Alarm Trip* level for the configured delay timer after the *Safety On Delay* timer had expired.
Exp. Unit Failure	The module detected that communications to one of the DSENet® expansion modules had been lost.
Fail to Synchronise	The module failed to synchronise the generator before the *Fail to Sync Delay* timer had expired. The generator continues to synchronise until it is either achieved or runs out of fuel.
Flexible Sensor A to D High	**NOTE: Due to module configuration the alarm message that appears on the display may be different. For further details of module configuration, refer to DSE Publication: 057-238 DSE8610 MKII Configuration Suite PC Software Manual.** The module detected that an analogue input value had risen above the *Flexible Sensor High Pre-Alarm Trip* level.

Continued over page…

Fault	Description
Flexible Sensor A to D Low	**NOTE: Due to module configuration the alarm message that appears on the display may be different. For further details of module configuration, refer to DSE Publication: 057-238 DSE8610 MKII Configuration Suite PC Software Manual.** The module detected that an analogue input value had fallen below the *Flexible Sensor Low Pre-Alarm Trip* level.
Fuel Level High IEEE C37.2 - 71 Liquid Level Switch	The module detected that the engine fuel level had risen the *High Fuel Level Pre-Alarm* level for the configured delay.
Fuel Level Low IEEE C37.2 - 71 Liquid Level Switch	The module detected that the engine fuel level had fallen below the *Low Fuel Level Pre-Alarm* level for the configured delay
Fuel Level Low Switch IEEE C37.2 - 71 Liquid Level Switch	The module detected that the engine low fuel level switch had activated.
Fuel Tank Bund Level High IEEE C37.2 - 71 Liquid Level Switch	The module detected that the fuel tank bund level switch had activated.
Fuel Usage IEEE C37.2 – 80 Flow Switch	The module detected that the fuel consumption was more than the configured *Running Rate* or *Stopped Rate*.
Gen Earth Fault IEEE C37.2 – 51G or 51N Generator IDMT Earth Fault Relay	**NOTE: For more details, see section entitled *Earth Fault IDMT Alarm* elsewhere in this document.** The module detected that the generator earth fault current had risen above the *Earth Fault Trip Level* for the duration of the IDMT function.
Gen Failed to Open IEEE C37.2 – 52b AC Circuit Breaker Position (Contact Open when Breaker Closed)	The module detected that the generator load switch had failed to open as the *Generator Closed Auxiliary* input stayed activate for the Generator Fail to Open Delay time after the Open Gen Output activated.
Gen Loading Frequency	The module detected that the generator output frequency had not risen above the *Generator Loading Frequency* setting after the *Warming Up* timer had expired.
Gen Loading Voltage	The module detected that the generator output voltage had not risen above the *Generator Loading Voltage* setting after the *Warming Up* timer had expired.
Gen Over Current IEEE C37.2 – 50 Instantaneous Overcurrent Relay IEEE C37.2 – 51 IDMT Overcurrent Relay	**NOTE: For more details, see section entitled *Over Current Alarm* elsewhere in this document.** The module detected that the generator output current had risen above the *Generator Over Current Trip*.
Gen Over Frequency IEEE C37.2 – 81 Frequency Relay	The module detected that the generator output frequency had risen above the *Over Frequency Pre-Alarm Trip* level for the configured delay timer.
Gen Over Frequency Delayed IEEE C37.2 – 81 Frequency Relay	The module detected that the generator output frequency had risen above the *Over Frequency Trip* level but was below the *Over Frequency Overshoot Trip* for the configured *Overshoot Delay* timer during starting.
Gen Over Voltage IEEE C37.2 – 59 AC Overvoltage Relay	The module detected that the generator output voltage had risen above the *Over Voltage Pre-Alarm Trip* level for the configured delay timer.
Gen Reverse Power IEEE C37.2 – 32 Directional Power Relay	The module detected that the generator output kW had fallen below the *Reverse Power Trip* for the configured delay timer.

Continued over page…

Fault	Description
Gen Short Circuit IEEE C37.2 – 51 IDMT Short Circuit Relay	**NOTE: For more details, see section entitled *Short Circuit IDMT Alarm* elsewhere in this document.** The module detected that the generator output current had risen above the *Short Circuit Trip* for the duration of the IDMT function.
Gen Under Frequency IEEE C37.2 – 81 Frequency Relay	The module detected that the generator output frequency had fallen below the *Under Frequency Pre-Alarm Trip* level for the configured delay timer after the *Safety On Delay* timer had expired.
Gen Under Voltage IEEE C37.2 – 27 AC Undervoltage Relay	The module detected that the generator output voltage had fallen below the *Under Voltage Pre-Alarm Trip* level for the configured delay timer after the *Safety On Delay* timer had expired.
HEST Active	The module received a fault condition from the engine ECU alerting that the HEST had activated.
Inlet Temperature	The module detected that the engine's ECU measurement of inlet temperature had risen above the *Inlet Temperature Pre-Alarm Trip* level.
Insufficient Capacity	The module's governor output has reached its limit whilst attempting to control the generator to produce more kWs whilst in parallel. This indicates a fault with either the governor (including connection error), setting of SW2, or that the engine has reached its maximum capacity.
kW Overload IEEE C37.2 – 32 Directional Power Relay	The module detected that the generator output kW had risen above the *Overload Protection Trip* for the configured delay timer
Loss Of Excitation	The module detected that the generator output kvar had fallen below the *Loss of Excitation Pre-Alarm Trip* level.
Loss of Mag-PU	The module detected that the magnetic pick up was not producing a pulse output after the required *Crank Disconnect* criteria had been met.
Low Coolant Warning	The module detected that the engine coolant temperature had fallen below the *Low Coolant Temperature Pre-Alarm Trip* level.
Maintenance Due	**NOTE: Due to module configuration the alarm message that appears on the display may be different. For further details of module configuration, refer to DSE Publication: 057-238 DSE8610 MKII Configuration Suite PC Software Manual.** The module detected that one of the configured maintenance alarms is due as its configured maintenance interval has expired.
MSC Alarms Inhibited	The module detected that an input configured for *MSC Alarms Inhibit* had become active disabling all the MSC alarms.
MSC 1 and 2 Failure	That module detected that the MSC and Redundant MSC communication failed, most likely caused by it being disconnected.
MSC 1 Data Error	The module detected that data on the MSC link had become corrupt, possibly caused by incorrect wiring or faulty cabling.
MSC 1 Link Failure	That module detected that the MSC communication failed, most likely caused by it being disconnected.
MSC 1 Too Few Sets	That module detected that the number of modules on the MSC was less than the configured *Minimum Modules on MSC Link* setting.
MSC 2 Data Error	The module detected that data on the Redundant MSC link had become corrupt, possibly caused by incorrect wiring or faulty cabling.
MSC 2 Link Failure	That module detected that the Redundant MSC communication failed, most likely caused by it being disconnected.

Continued over page…

Fault	Description
MSC 2 Too Few Sets	That module detected that the number of modules on the Redundant MSC was less than the configured *Minimum Modules on MSC Link* setting.
Negative Phase Sequence IEEE C37.2 - 46 Phase-Balance Current Relay	The module detected that there was an imbalance of current across the generator phases greater than the *Negative Phase Sequence Trip Level* percentage setting.
Oil Pressure Low IEEE C37.2 - 63 Pressure Switch	The module detected that the engine oil pressure had fallen below the *Low Oil Pressure Pre-Alarm Trip* level after the *Safety On Delay* timer had expired.
Protections Disabled	The module detected that an input configured for Protections Disable became active.
SCR Inducement	The module received a fault condition from the engine ECU alerting about the SCR Inducement.
Water in Fuel	The module received a fault condition from the engine ECU alerting that water in the fuel had been detected or that the *Water in Fuel* input switch had activated.
Wet Stacking	The module detected that the generator output kW had fallen below the *Low Load Alarm Trip* level for the configured delay timer.

6.4 ELECTRICAL TRIP ALARMS

NOTE: The fault condition must be resolved before the alarm can be reset. If the fault condition remains, it is not possible to reset the alarm (the exception to this is the *Coolant Temp High* alarm and similar *Active From Safety On* alarms, as the coolant temperature could be high with the engine at rest).

Electrical Trip Alarms are latching and stop the Generator but in a controlled manner. On initiation of the electrical trip condition the module de-activates the ***Close Gen Output*** outputs to remove the load from the generator. Once this has occurred the module starts the *Cooling Timer* and allows the engine to cool off-load before shutting down the engine. To restart the generator the fault must be cleared, and the alarm reset.

Example:

1/2 Alarms
Gen Over Current
Electrical Trip

In the event of an alarm the LCD jumps to the alarms page and scrolls through all active alarms.

Electrical Trip Alarms are latching alarms and to remove the fault, press the ***Stop/Reset Mode*** button on the module.

Fault	Description
2130 ID 1 to 4 Analogue Input E to H High	**NOTE: Due to module configuration the alarm message that appears on the display may be different. For further details of module configuration, refer to DSE Publication: *057-238 DSE8610 MKII Configuration Suite PC Software Manual.*** The module detected that an analogue input value of a DSE2130 had risen above the *Flexible Sensor High Alarm Trip* level.
2130 ID 1 to 4 Analogue Input E to H Low	**NOTE: Due to module configuration the alarm message that appears on the display may be different. For further details of module configuration, refer to DSE Publication: 057-238 DSE8610 MKII Configuration Suite PC Software Manual.** The module detected that an analogue input value of a DSE2130 had fallen below the *Flexible Sensor Low Alarm Trip* level.
2130 ID1 to 4 Digital Input A to H	**NOTE: Due to module configuration the alarm message that appears on the display may be different. For further details of module configuration, refer to DSE Publication: *057-238 DSE8610 MKII Configuration Suite PC Software Manual.*** The module detected that a digital input configured to create a fault condition on a DSE2130 expansion module became active and the appropriate LCD message displayed.

Continued over page…

Fault	Description
2131 ID 1 to 4 Analogue Input A to J High	**NOTE: Due to module configuration the alarm message that appears on the display may be different. For further details of module configuration, refer to DSE Publication: *057-238 DSE8610 MKII Configuration Suite PC Software Manual.*** The module detected that an analogue input value of a DSE2131 had risen above the *Flexible Sensor High Alarm Trip* level.
2131 ID 1 to 4 Analogue Input A to J Low	**NOTE: Due to module configuration the alarm message that appears on the display may be different. For further details of module configuration, refer to DSE Publication: 057-238 DSE8610 MKII Configuration Suite PC Software Manual.** The module detected that an analogue input value of a DSE2131 had fallen below the *Flexible Sensor Low Alarm Trip* level.
2131 ID1 to 4 Digital Input A to J	**NOTE: Due to module configuration the alarm message that appears on the display may be different. For further details of module configuration, refer to DSE Publication: *057-238 DSE8610 MKII Configuration Suite PC Software Manual.*** The module detected that a digital input configured to create a fault condition on a DSE2131 expansion module became active and the appropriate LCD message displayed.
2133 ID 1 to 4 Analogue Input A to H High	**NOTE: Due to module configuration the alarm message that appears on the display may be different. For further details of module configuration, refer to DSE Publication: *057-238 DSE8610 MKII Configuration Suite PC Software Manual.*** The module detected that an analogue input value of a DSE2133 had risen above the *Flexible Sensor High Alarm Trip* level.
2133 ID 1 to 4 Analogue Input A to H Low	**NOTE: Due to module configuration the alarm message that appears on the display may be different. For further details of module configuration, refer to DSE Publication: 057-238 DSE8610 MKII Configuration Suite PC Software Manual.** The module detected that an analogue input value of a DSE2133 had fallen below the *Flexible Sensor Low Alarm Trip* level.
Analogue Input A to D (Digital)	**NOTE: Due to module configuration the alarm message that appears on the display may be different. For further details of module configuration, refer to DSE Publication: 057-238 DSE8610 MKII Configuration Suite PC Software Manual.** **The module detected that an analogue input configured as a digital input to create a fault condition became active and the appropriate LCD message is displayed.**
Auto Sense Fail	The module detected that the output voltage of the generator had risen above the *Over Voltage During Auto Sensing Trip* level during starting whilst attempting to detect which alternative configuration to use.

Continued over page…

Fault	Description
AVR Maximum Trim Limit	The module's AVR output has reached its limit whilst attempting to control the generator to produce more kvars whilst in parallel. This indicates a fault with either the AVR (including connection error), setting of SW2, or that the alternator has reached its maximum capacity.
Bus Not Live	**NOTE: For further details, refer to DSE Publication: 056-047 Out of Sync and Failed to Close Training Document.** The module did not detect bus voltage or frequency when the generator's load switch closed on to a dead bus.
Bus Phase Seq Wrong IEEE C37.2 – 47 Phase Sequence Relay	The module detected that the phase rotation of the bus was different to the configured *Bus Phase Rotation Alarm* setting.
Calibration Fault	The module detected that its internal calibration has failed. The unit must be sent back to DSE to be investigated and repaired. Contact DSE Technical Support for more details.
Charger ID 0 to 3 Common Electrical Trip	**NOTE: Due to module configuration the alarm message that appears on the display may be different. For further details of module configuration, refer to DSE Publication: *057-238 DSE8610 MKII Configuration Suite PC Software Manual.*** The module detected that a battery charger connected by DSENet® had issued a *Common Electrical Trip Alarm*.
Combined Mains Decoupling	The module detected that the mains supply failed when the generator was in parallel with it.
Coolant Temp High IEEE C37.2 – 26 Apparatus Thermal Device	The module detected that the engine coolant temperature had risen above the *High Coolant Temperature Electrical Trip* level after the *Safety On Delay* timer had expired.
DEF Level Low	The module received a fault condition from the engine ECU alerting about the DEF level.
Digital Input A to L	**NOTE: Due to module configuration the alarm message that appears on the display may be different. For further details of module configuration, refer to DSE Publication: 057-238 DSE8610 MKII Configuration Suite PC Software Manual.** The module detected that a digital input configured to create a fault condition became active and the appropriate LCD message is displayed.
DPTC Filter	The module received a fault condition from the engine ECU alerting that the DPF/DPTC had activated.
ECU Amber	The module received an amber fault condition from the engine ECU.
ECU Data Fail	The module is configured for CAN operation but has not detected data being sent from the engine's ECU.
ECU Malfunc.	The module received a malfunction fault condition from the engine ECU.
ECU Protect	The module received a protect fault condition from the engine ECU.
ECU Red	The module received a red fault condition from the engine ECU.
Engine Under Speed IEEE C37.2 - 14 Underspeed Device	The module detected that the engine speed had fallen below the *Under Speed Alarm Trip* level for the configured delay timer after the *Safety On Delay* timer had expired.
ETrip from 8660	The module was instructed by the DSE8660 over the MSC link to trip open the generator breaker for protection purposes.

Continued over page…

Fault	Description
Exp. Unit Failure	The module detected that communications to one of the DSENet® expansion modules had been lost.
Fail to Synchronise	The module failed to synchronise the generator before the *Fail to Sync Delay* timer had expired.
Flexible Sensor A to D High	**NOTE: Due to module configuration the alarm message that appears on the display may be different. For further details of module configuration, refer to DSE Publication: *057-238 DSE8610 MKII Configuration Suite PC Software Manual.*** The module detected that an analogue input value had risen above the *Flexible Sensor High Alarm Trip* level.
Flexible Sensor A to D Low	**NOTE: Due to module configuration the alarm message that appears on the display may be different. For further details of module configuration, refer to DSE Publication: *057-238 DSE8610 MKII Configuration Suite PC Software Manual.*** The module detected that an analogue input value had fallen below the *Flexible Sensor Low Alarm Trip* level.
Fuel Level High IEEE C37.2 - 71 Liquid Level Switch	The module detected that the engine fuel level had risen the *High Fuel Level Alarm* level for the configured delay.
Fuel Level Low IEEE C37.2 - 71 Liquid Level Switch	The module detected that the engine fuel level had fallen below the *Low Fuel Level Alarm* level for the configured delay
Fuel Level Low Switch IEEE C37.2 - 71 Liquid Level Switch	The module detected that the engine low fuel level switch had activated.
Fuel Tank Bund Level High IEEE C37.2 - 71 Liquid Level Switch	The module detected that the fuel tank bund level switch had activated.
Fuel Usage IEEE C37.2 – 80 Flow Switch	The module detected that the fuel consumption was more than the configured Running Rate or Stopped Rate.
Gen Earth Fault IEEE C37.2 – 51G or 51N Generator IDMT Earth Fault Relay	**NOTE: For more details, see section entitled Earth Fault IDMT Alarm elsewhere in this document.** The module detected that the generator earth fault current had risen above the *Earth Fault Trip Level* for the duration of the IDMT function.
Gen Failed to Close IEEE C37.2 – 52b AC Circuit Breaker Position (Contact Open when Breaker Closed)	The module detected that the generator load switch had failed to close as the *Generator Closed Auxiliary* input did not activate within the *Generator Fail to Close Delay* time after the *Close Gen Output* activated.
Gen Loading Frequency	The module detected that the generator output frequency had not risen above the Generator Loading Frequency setting after the Warming Up timer had expired.
Gen Loading Voltage	The module detected that the generator output voltage had not risen above the Generator Loading Voltage setting after the Warming Up timer had expired.
Gen Over Current IEEE C37.2 – 51 IDMT Overcurrent Relay	**NOTE: For more details, see section entitled Over Current Alarm elsewhere in this document.** The module detected that the generator output current had risen above the Generator Over Current Trip for the duration of the IDMT function.

Continued over page…

Fault	Description
Gen Phase Seq Wrong IEEE C37.2 – 47 Phase Sequence Relay	The module detected that the phase rotation of the generator was different to the configured Generator Phase Rotation Alarm setting.
Gen Reverse Power IEEE C37.2 – 32 Directional Power Relay	The module detected that the generator output kW had fallen below the *Reverse Power Trip* for the configured delay timer.
Gen Short Circuit IEEE C37.2 – 51 IDMT Short Circuit Relay	**NOTE: For more details, see section entitled *Short Circuit IDMT Alarm* elsewhere in this document.** The module detected that the generator output current had risen above the *Short Circuit Trip* for the duration of the IDMT function.
Inlet Temperature	The module detected that the engine's ECU measurement of inlet temperature had risen above the *Inlet Temperature Alarm Trip* level.
Insufficient Capacity	The module's governor output has reached its limit whilst attempting to control the generator to produce more kWs whilst in parallel. This indicates a fault with either the governor (including connection error), setting of SW2, or that the engine has reached its maximum capacity.
kW Overload IEEE C37.2 – 32 Directional Power Relay	The module detected that the generator output kW had risen above the Overload Protection Trip for the configured delay timer.
Loss of Excitation	The module detected that the generator output kvar had fallen below the *Loss of Excitation Alarm Trip* level for the configured delay.
Loss of Mag-PU	The module detected that the magnetic pick up was not producing a pulse output after the required Crank Disconnect criteria had been met.
Mains Decoupling OF	The module detected that the mains frequency had risen above the *Mains Decoupling Over Frequency Trip* level when the generator was in parallel with the mains.
Mains Decoupling OV	The module detected that the mains voltage had risen above the *Mains Decoupling Over Voltage Trip* level when the generator was in parallel with the mains.
Mains Decoupling UF	The module detected that the mains frequency had fallen below the *Mains Decoupling Under Frequency Trip* level when the generator was in parallel with the mains.
Mains Decoupling UV	The module detected that the mains voltage had risen above the *Mains Decoupling Under Voltage Trip* level when the generator was in parallel with the mains.
Mains ROCOF	The module detected that the mains frequency had changed at a rate larger than the *Mains ROCOF Alarm Trip* level when the generator was in parallel with the mains.
Mains Vector Shift	The module detected that the mains voltage waveform's vector had shifted more than the *Mains Vector Shift Alarm Trip* level when the generator was in parallel with the mains.
Maintenance Due	**NOTE: Due to module configuration the alarm message that appears on the display may be different. For further details of module configuration, refer to DSE Publication: 057-238 DSE8610 MKII Configuration Suite PC Software Manual.** The module detected that one of the configured maintenance alarms is due as its configured maintenance interval has expired.
MSC ID Error	The module detected that another module on the MSC link had the same *GenSet MSC ID* configured.

Continued over page…

Fault	Description
MSC Old Version Unit	The module detected that another module on the MSC link was incompatible. Check all the module firmware version numbers (under *About* | *Application Number* on the modules' displays) and ensure all are the latest version firmware. Use the DSE Configuration Suite Software to upgrade the firmware (*Tools* | *Update Firmware*) of the older modules.
MSC 1 and 2 Failure	That module detected that the MSC and Redundant MSC communication failed, most likely caused by it being disconnected.
MSC 1 Link Failure	That module detected that the MSC communication failed, most likely caused by it being disconnected.
MSC 1 Too Few Sets	That module detected that the number of modules on the MSC was less than the configured *Minimum Modules on MSC Link* setting.
MSC 2 Link Failure	That module detected that the Redundant MSC communication failed, most likely caused by it being disconnected.
MSC 2 Too Few Sets	That module detected that the number of modules on the Redundant MSC was less than the configured *Minimum Modules on MSC Link* setting.
Negative Phase Sequence IEEE C37.2 - 46 Phase-Balance Current Relay	The module detected that there was an imbalance of current across the generator phases greater than the *Negative Phase Sequence Trip Level* percentage setting.
Out Of Sync	**NOTE: For further details, refer to DSE Publication: 056-047 Out of Sync and Failed to Close Training Document.** The module did not detect that the generator and bus voltage have drifted out of sync. This is caused by some form of external logic tripping open the generator load switch without it informing the DSE module.
SCR Inducement	The module received a fault condition from the engine ECU alerting about the SCR Inducement.
Water in Fuel	The module received a fault condition from the engine ECU alerting that water in the fuel had been detected or that the *Water in Fuel* input switch had activated.

6.5 SHUTDOWN ALARMS

NOTE: The fault condition must be resolved before the alarm can be reset. If the fault condition remains, it is not possible to reset the alarm (the exception to this is the *Oil Pressure Low* alarm and similar *Active From Safety On* alarms, as the oil pressure is low with the engine at rest).

Shutdown Alarms are latching and immediately stop the Generator. On initiation of the shutdown condition the module de-activates the ***Close Gen Output*** outputs to remove the load from the generator. Once this has occurred, the module shuts the generator set down immediately to prevent further damage. To restart the generator the fault must be cleared and the alarm reset.

Example:

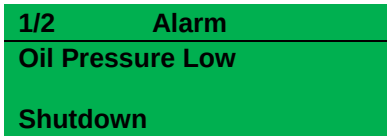

In the event of an alarm the LCD jumps to the alarms page and scrolls through all active alarms.

Shutdown Alarms are latching alarms and to remove the fault, press the ***Stop/Reset Mode*** button on the module.

Fault	Description
2130 ID 1 to 4 Analogue Input E to H High	**NOTE: Due to module configuration the alarm message that appears on the display may be different. For further details of module configuration, refer to DSE Publication: *057-238 DSE8610 MKII Configuration Suite PC Software Manual.*** The module detected that an analogue input value of a DSE2130 had risen above the *Flexible Sensor High Alarm Trip* level.
2130 ID 1 to 4 Analogue Input E to H Low	**NOTE: Due to module configuration the alarm message that appears on the display may be different. For further details of module configuration, refer to DSE Publication: 057-238 DSE8610 MKII Configuration Suite PC Software Manual.** The module detected that an analogue input value of a DSE2130 had fallen below the *Flexible Sensor Low Alarm Trip* level.
2130 ID1 to 4 Digital Input A to H	**NOTE: Due to module configuration the alarm message that appears on the display may be different. For further details of module configuration, refer to DSE Publication: *057-238 DSE8610 MKII Configuration Suite PC Software Manual.*** The module detected that a digital input configured to create a fault condition on a DSE2130 expansion module became active and the appropriate LCD message displayed.

Continued over page…

Fault	Description
2131 ID 1 to 4 Analogue Input A to J High	**NOTE: Due to module configuration the alarm message that appears on the display may be different. For further details of module configuration, refer to DSE Publication: *057-238 DSE8610 MKII Configuration Suite PC Software Manual.*** The module detected that an analogue input value of a DSE2131 had risen above the *Flexible Sensor High Alarm Trip* level.
2131 ID 1 to 4 Analogue Input A to J Low	**NOTE: Due to module configuration the alarm message that appears on the display may be different. For further details of module configuration, refer to DSE Publication: 057-238 DSE8610 MKII Configuration Suite PC Software Manual.** The module detected that an analogue input value of a DSE2131 had fallen below the *Flexible Sensor Low Alarm Trip* level.
2131 ID1 to 4 Digital Input A to J	**NOTE: Due to module configuration the alarm message that appears on the display may be different. For further details of module configuration, refer to DSE Publication: *057-238 DSE8610 MKII Configuration Suite PC Software Manual.*** The module detected that a digital input configured to create a fault condition on a DSE2131 expansion module became active and the appropriate LCD message displayed.
2133 ID 1 to 4 Analogue Input A to H High	**NOTE: Due to module configuration the alarm message that appears on the display may be different. For further details of module configuration, refer to DSE Publication: *057-238 DSE8610 MKII Configuration Suite PC Software Manual.*** The module detected that an analogue input value of a DSE2133 had risen above the *Flexible Sensor High Alarm Trip* level.
2133 ID 1 to 4 Analogue Input A to H Low	**NOTE: Due to module configuration the alarm message that appears on the display may be different. For further details of module configuration, refer to DSE Publication: 057-238 DSE8610 MKII Configuration Suite PC Software Manual.** The module detected that an analogue input value of a DSE2133 had fallen below the *Flexible Sensor Low Alarm Trip* level.
Analogue Input A to D (Digital)	**NOTE: Due to module configuration the alarm message that appears on the display may be different. For further details of module configuration, refer to DSE Publication: *057-238 DSE8610 MKII Configuration Suite PC Software Manual.*** The module detected that an analogue input configured as a digital input to create a fault condition became active and the appropriate LCD message is displayed.
Air Flap Closed	The module detected that a digital input configured for *Air-Flap Closed Auxiliary* became active.
Auto Sense Fail	The module detected that the output voltage of the generator had risen above the *Over Voltage During Auto Sensing Trip* level during starting whilst attempting to detect which alternative configuration to use.

Continued over page…

Fault	Description
AVR Maximum Trim Limit	The module's AVR output has reached its limit whilst attempting to control the generator to produce more kvars whilst in parallel. This indicates a fault with either the AVR (including connection error), setting of SW2, or that the alternator has reached its maximum capacity.
Battery Temp	The module detected that a battery charger connected by DSENet® had issued a *Battery Temperature* alarm
Calibration Fault	The module detected that its internal calibration has failed. The unit must be sent back to DSE to be investigated and repaired. Contact DSE Technical Support for more details.
Charge Alt Failure IEEE C37.2 – 27DC Undervoltage Relay	The module detected that the output voltage of the charge alternator had risen above the *Charge Alternator Shutdown Trip* level for the configured delay timer.
Charger Failure	The module detected that a battery charger connected by DSENet® had a *Charger Failure* alarm.
Charger Fan Locked	The module detected that a battery charger connected by DSENet® had a *Charger Failure* alarm.
Charger High Temperature	The module detected that a battery charger connected by DSENet® had a *High Temperature* alarm.
Charger Input Fuse Fail	The module detected that a battery charger connected by DSENet® had an *Input Fuse Fail* alarm.
Charger ID 0 to 3 Common Shutdown	**NOTE: Due to module configuration the alarm message that appears on the display may be different. For further details of module configuration, refer to DSE Publication: *057-238 DSE8610 MKII Configuration Suite PC Software Manual.*** The module detected that a battery charger connected by DSENet® had issued a *Common Shutdown Alarm*.
Charger Mains High Current	The module detected that a battery charger connected by DSENet® had a *Mains High Current* alarm.
Charger Mains High Voltage	The module detected that a battery charger connected by DSENet® had a *Mains High Voltage* alarm.
Charger Mains Low Voltage	The module detected that a battery charger connected by DSENet® had a *Mains Low Voltage* alarm.
Charger Reverse Polarity	The module detected that a battery charger connected by DSENet® had a *Reverse Polarity* alarm.
Charger Short Circuit	The module detected that a battery charger connected by DSENet® had a *Short Circuit* alarm.
Charger Short Circuit / Reverse Polarity	The module detected that a battery charger connected by DSENet® had a combined *Short Circuit* and *Reverse Polarity* alarm.
Coolant Temp High IEEE C37.2 – 26 Apparatus Thermal Device	The module detected that the engine coolant temperature had risen above the *High Coolant Temperature Shutdown Trip* level after the *Safety On Delay* timer had expired.
Coolant Temp High Switch IEEE C37.2 – 26 Apparatus Thermal Device	The module detected that the high engine coolant temperature switch had activated after the *Safety On Delay* timer had expired.
DEF Level Low	The module received a fault condition from the engine ECU alerting about the DEF level.

Continued over page…

Fault	Description
Digital Input A to L	**NOTE: Due to module configuration the alarm message that appears on the display may be different. For further details of module configuration, refer to DSE Publication: *057-238 DSE8610 MKII Configuration Suite PC Software Manual.*** The module detected that a digital input configured to create a fault condition became active and the appropriate LCD message is displayed.
DPTC Filter	The module received a fault condition from the engine ECU alerting that the DPF/DPTC had activated.
ECU Amber	The module received an amber fault condition from the engine ECU.
ECU Data Fail	The module is configured for CAN operation but has not detected data being sent from the engine's ECU.
ECU Malfunc.	The module received a malfunction fault condition from the engine ECU.
ECU Protect	The module received a protect fault condition from the engine ECU.
ECU Red	The module received a red fault condition from the engine ECU.
Emergency Stop IEEE C37.2 - 5 Stopping Device	The module detected that emergency stop button had been pressed removing a positive voltage supply from the emergency stop input terminal. This input is failsafe (normally closed to emergency stop) and immediately stops the generator when the signal is removed.
Engine Over Speed IEEE C37.2 - 12 Overspeed Device	The module detected that the engine speed had risen above the *Over Speed Alarm Trip* level for the configured delay timer.
Engine Over Speed Overshoot IEEE C37.2 - 12 Overspeed Device	The module detected that the engine speed had risen above the *Over Speed Overshoot Trip* during the configured *Overshoot Delay* timer whilst starting.
Engine Under Speed IEEE C37.2 - 14 Underspeed Device	The module detected that the engine speed had fallen below the *Under Speed Alarm Trip* level for the configured delay timer after the *Safety On Delay* timer had expired.
Exp. Unit Failure	The module detected that communications to one of the DSENet® expansion modules had been lost.
Failed to Start IEEE C37.2 - 48 Incomplete Sequence Relay	The module detected that the generator had failed to start as it did not meet the required Crank Disconnect criteria during the configured number of Crank Attempts.
Failed to Stop IEEE C37.2 - 48 Incomplete Sequence Relay	**NOTE: *Fail to Stop* could indicate a faulty oil pressure sensor. If engine is at rest, check the oil pressure sensor wiring and configuration.** The module detects a condition that indicates the generator is running when the DSE module has instructed it to stop.
Flexible Sensor A to D High	**NOTE: Due to module configuration the alarm message that appears on the display may be different. For further details of module configuration, refer to DSE Publication: *057-238 DSE8610 MKII Configuration Suite PC Software Manual.*** The module detected that an analogue input value had risen above the *Flexible Sensor High Alarm Trip* level.

Continued over page…

Fault	Description
Flexible Sensor A to D Low	**NOTE: Due to module configuration the alarm message that appears on the display may be different. For further details of module configuration, refer to DSE Publication: *057-238 DSE8610 MKII Configuration Suite PC Software Manual.*** The module detected that an analogue input value had fallen below the *Flexible Sensor Low Alarm Trip* level.
Fuel Level High IEEE C37.2 - 71 Liquid Level Switch	The module detected that the engine fuel level had risen the *High Fuel Level Alarm* level for the configured delay.
Fuel Level Low IEEE C37.2 - 71 Liquid Level Switch	The module detected that the engine fuel level had fallen below the *Low Fuel Level Alarm* level for the configured delay
Fuel Level Low Switch IEEE C37.2 - 71 Liquid Level Switch	The module detected that the engine low fuel level switch had activated.
Fuel Sensor Fault	The module detected that circuit to the engine fuel level sensor had become open circuit.
Fuel Tank Bund Level High IEEE C37.2 - 71 Liquid Level Switch	The module detected that the fuel tank bund level switch had activated.
Fuel Usage IEEE C37.2 – 80 Flow Switch	The module detected that the fuel consumption was more than the configured Running Rate or Stopped Rate.
Gen Earth Fault IEEE C37.2 – 51G or 51N Generator IDMT Earth Fault Relay	**NOTE: For more details, see section entitled Earth Fault IDMT Alarm elsewhere in this document.** The module detected that the generator earth fault current had risen above the *Generator Earth Fault Trip Level* for the duration of the IDMT function.
Gen Loading Frequency	The module detected that the generator output frequency had not risen above the Generator Loading Frequency setting after the Warming Up timer had expired.
Gen Loading Voltage	The module detected that the generator output voltage had not risen above the Generator Loading Voltage setting after the Warming Up timer had expired.
Gen Over Current IEEE C37.2 – 51 IDMT Overcurrent Relay	**NOTE: For more details, see section entitled Over Current Alarm elsewhere in this document.** The module detected that the generator output current had risen above the *Generator Over Current Trip* for the duration of the IDMT function.
Gen Over Frequency IEEE C37.2 – 81 Frequency Relay	The module detected that the generator output frequency had risen above the *Over Frequency Alarm Trip* level for the configured delay timer.
Gen Over Frequency Overshoot IEEE C37.2 – 81 Frequency Relay	The module detected that the generator output frequency had risen above the *Over Frequency Overshoot Trip* during the configured *Overshoot Delay* timer whilst starting.
Gen Over Voltage IEEE C37.2 – 59 AC Overvoltage Relay	The module detected that the generator output voltage had risen above the *Over Voltage Alarm Trip* level for the configured delay timer.
Gen Phase Seq Wrong IEEE C37.2 – 47 Phase Sequence Relay	The module detected that the phase rotation of the generator was different to the configured *Generator Phase Rotation Alarm* setting.
Gen Reverse Power IEEE C37.2 – 32 Directional Power Relay	The module detected that the generator output kW had fallen below the *Reverse Power Trip* for the configured delay timer.

Continued over page…

Fault	Description
Gen Short Circuit IEEE C37.2 – 51 IDMT Short Circuit Relay	**NOTE: For more details, see section entitled *Short Circuit IDMT Alarm* elsewhere in this document.** The module detected that the generator output current had risen above the *Short Circuit Trip* for the duration of the IDMT function.
Gen Under Frequency IEEE C37.2 – 81 Frequency Relay	The module detected that the generator output frequency had fallen below the *Under Frequency Alarm Trip* level for the configured delay timer after the *Safety On Delay* timer had expired.
Gen Under Voltage IEEE C37.2 – 27 AC Undervoltage Relay	The module detected that the generator output voltage had fallen below the *Under Voltage Alarm Trip* level for the configured delay timer after the *Safety On Delay* timer had expired.
Inlet Temperature	The module detected that the engine's ECU measurement of inlet temperature had risen above the *Inlet Temperature Alarm Trip* level.
Insufficient Capacity	The module's governor output has reached its limit whilst attempting to control the generator to produce more kWs whilst in parallel. This indicates a fault with either the governor (including connection error), setting of SW2, or that the engine has reached its maximum capacity.
kW Overload IEEE C37.2 – 32 Directional Power Relay	The module detected that the generator output kW had risen above the Overload Protection Trip for the configured delay timer.
Loss of Excitation	The module detected that the generator output kvar had fallen below the *Loss of Excitation Alarm Trip* level for the configured delay.
Loss of Mag-PU	The module detected that the magnetic pick up was not producing a pulse output after the required Crank Disconnect criteria had been met.
Mag-PU Fault	The module detected that circuit to the magnetic pick up sensor had become open circuit.
Maintenance Due	**NOTE: Due to module configuration the alarm message that appears on the display may be different. For further details of module configuration, refer to DSE Publication: *057-238 DSE8610 MKII Configuration Suite PC Software Manual.*** The module detected that one of the configured maintenance alarms is due as its configured maintenance interval has expired.
Negative Phase Sequence IEEE C37.2 - 46 Phase-Balance Current Relay	The module detected that there was an imbalance of current across the generator phases greater than the *Negative Phase Sequence Trip Level* percentage setting.
Oil Press Sender Fault	The module detected that circuit to the engine oil pressure sensor had become open circuit.
Oil Pressure Low IEEE C37.2 - 63 Pressure Switch	The module detected that the engine oil pressure had fallen below the *Low Oil Pressure Shutdown Trip* level after the *Safety On Delay* timer had expired.
Oil Pressure Low Switch IEEE C37.2 - 63 Pressure Switch	The module detected that the low oil pressure switch had activated after the *Safety On Delay* timer had expired.
SCR Inducement	The module received a fault condition from the engine ECU alerting about the SCR Inducement.
Temp. Sender Fault	The module detected that circuit to the engine coolant temperature sensor had become open circuit.
Water in Fuel	The module received a fault condition from the engine ECU alerting that water in the fuel had been detected or that the *Water in Fuel* input switch had activated.

6.6 MAINTENANCE ALARMS

Depending upon module configuration one or more levels of engine maintenance alarm may occur based upon a configurable schedule.

Example 1:

Screen capture from DSE Configuration Suite Software showing the configuration of the Maintenance Alarm for 1, 2 and 3.

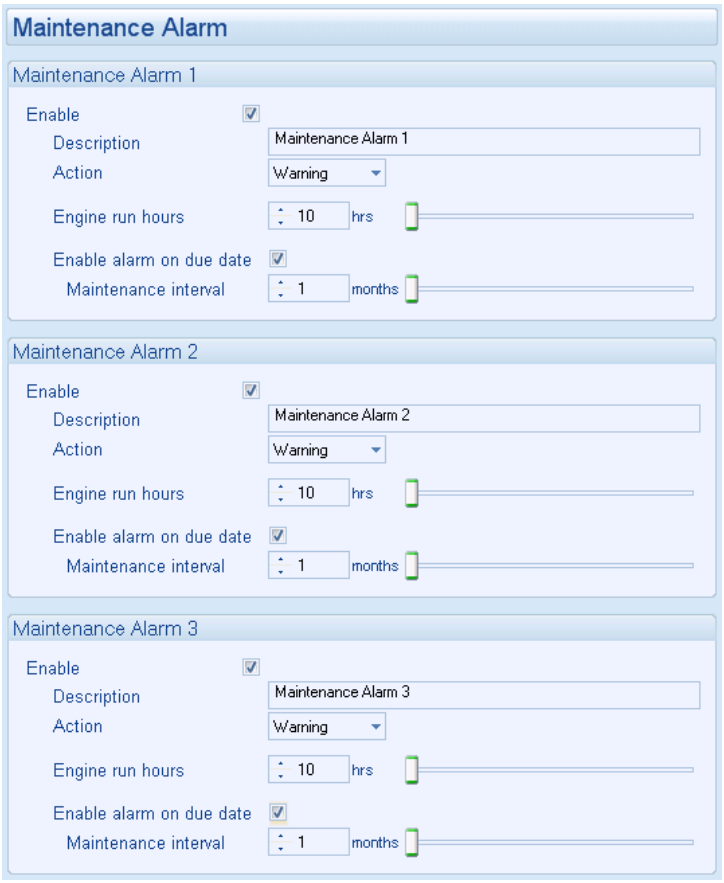

When activated, the maintenance alarm can be either a **warning** (set continues to run) or **shutdown** (running the set is not possible).

Resetting the maintenance alarm is normally actioned by the site service engineer after performing the required maintenance.
The method of reset is either by:

Activating an input that has been configured to Maintenance Reset Alarm 1, 2 or 3.

Pressing the maintenance reset button in the DSE Configuration Suite, Maintenance section.

Pressing and holding the ***Stop/Reset Mode*** button for 10 seconds on the desired Maintenance Alarm status page. This may be protected by a PIN number.

Example 2:

Screen capture from DSE Configuration Suite Software showing the configuration of a digital input for Reset Maintenance Alarm.

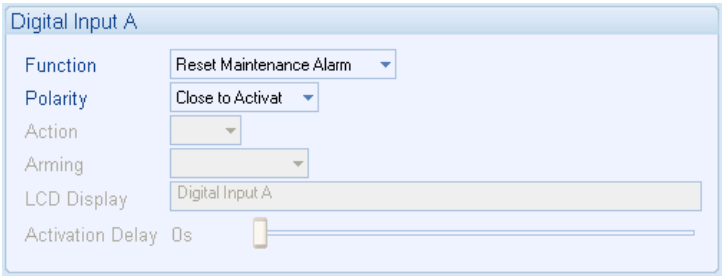

Example 3:

Screen capture from DSE Configuration Suite Software showing the Maintenance Alarm Reset 'button' in the DSE Configuration Suite SCADA | MAINTENANCE section.



Example 4:

Screen capture from DSE Configuration Suite Software showing the configuration holding stop button to reset the maintenance alarm.

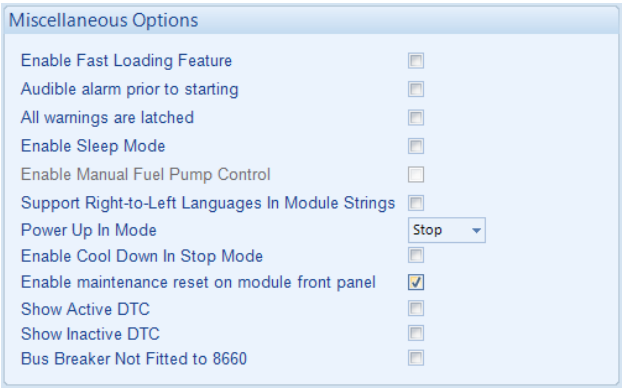

6.7 MAINS DECOUPLING ALARMS

NOTE: These protections only operate only when the mains and generator bus are in parallel, it is disabled at all other times.

When generator is in parallel with the mains, the module monitors for a Mains failure by detecting ROCOF or Vector Shift fault which are set in the module's configuration.

Should either of these alarms operate, the module performs an electrical trip of the generator breaker. This operation must be manually reset by:

- Pressing the ***Stop/Reset Mode*** button.
- Activation of a digital input configured to ***Clear Mains Decoupling Alarms*** if it has been configured.
- Pressing the ***Alarm Mute/Lamp Test*** and ***Tick*** buttons together for a small duration.

6.8 OVER CURRENT ALARM

The *Over Current Alarm* combines a simple warning trip level with a fully functioning IDMT curve for thermal protection.

6.8.1 IMMEDIATE WARNING

If the *Immediate Warning* is enabled, the controller generates a *warning alarm* as soon as the *Trip* level is reached. The alarm automatically resets once the generator loading current falls below the *Trip* level (unless *All Warnings are latched* is enabled). For further advice, consult the generator supplier.

6.8.2 INVERSE DEFINITE MINIMUM TIME (IDMT) ALARM

If the *Over Current IDMT Alarm* is enabled, the controller begins following the IDMT 'curve' when the current on any phase passes the *Trip* setting.

If the *Trip* is surpassed for an excess amount of time, the *IDMT Alarm* triggers (*Shutdown* or *Electrical Trip* as selected in *Action*).

The larger the over circuit fault, the faster the trip. The speed of the trip is dependent upon the fixed formula:

$$T = \frac{t}{\left(\frac{I_A}{I_T} - 1\right)^2}$$

Where:

T is the tripping time in seconds
I_A is the actual measured current of the most highly loaded line (L1, L2 or L3)
I_T is the delayed trip point setting in current
t is the time multiplier setting and also represents the tripping time in seconds at twice full load (when $^{I_A}/_{I_T} = 2$).

The settings shown in the example below are a screen capture of the DSE factory settings, taken from the DSE Configuration Suite PC Software for a brushless alternator.

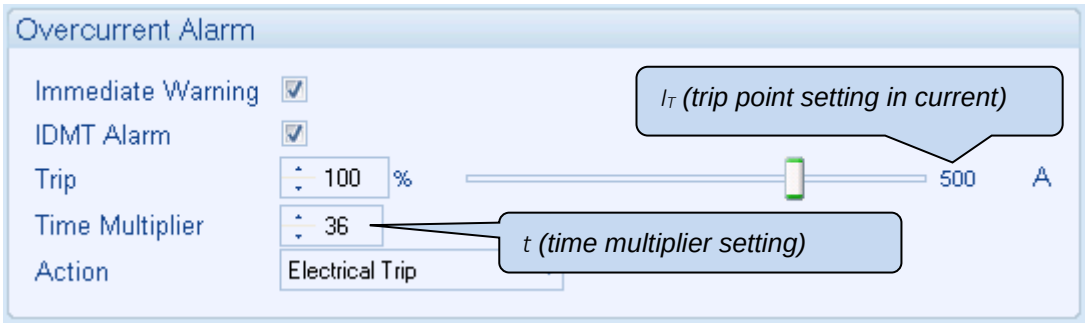

These settings provide for normal running of the generator up to 100% full load. If full load is surpassed, the *Immediate Warning* alarm is triggered and the set continues to run.

The effect of an overload on the generator is that the alternator windings begin to overheat; the aim of the *IDMT Alarm* is to prevent the windings being overload (heated) too much. The amount of time that the alternator can be safely overloaded is governed by how high the overload condition is.

The default settings as shown above allow for an overload of the alternator to the limits of the *Typical Brushless Alternator* whereby 110% overload is permitted for 1 hour or 200% overload is permitted for 36 seconds.

If the alternator load reduces, the controller then follows a cooling curve. This means that a second overload condition may trip soon after the first as the controller knows if the windings have not cooled sufficiently.

For further details on the *Thermal Damage Curve* of your alternator, refer to the alternator manufacturer and generator supplier.

6.8.2.1 CREATING A SPREADSHEET FOR THE OVER CURRENT IDMT CURVE

The formula used:

$$T = \frac{t}{\left(\frac{I_A}{I_T} - 1\right)^2}$$

Where:

T is the tripping time in seconds
I_A is the actual measured current of the most highly loaded line (L1, L2 or L3)
I_T is the delayed trip point setting in current
t is the time multiplier setting and also represents the tripping time in seconds at twice full load (when $^{I_A}/_{I_T} = 2$).

The equation can be simplified for addition into a spreadsheet. This is useful for 'trying out' different values of t *(time multiplier setting)* and viewing the results, without actually testing this on the generator.

	A	B	C	D	E	F
1		1.01	1.02	1.03	1.05	1.06
2	36	360000	90000	40000	14400	10000

$^{I_A}/_{I_T}$ *(multiple of the Trip setting from 1.01 to 3.0 in steps of 0.1)*

t (time multiplier setting)

T (tripping time in seconds)

The formula for the *Tripping Time* cells is:

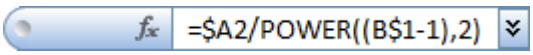

Over Current IDMT Alarm Curves

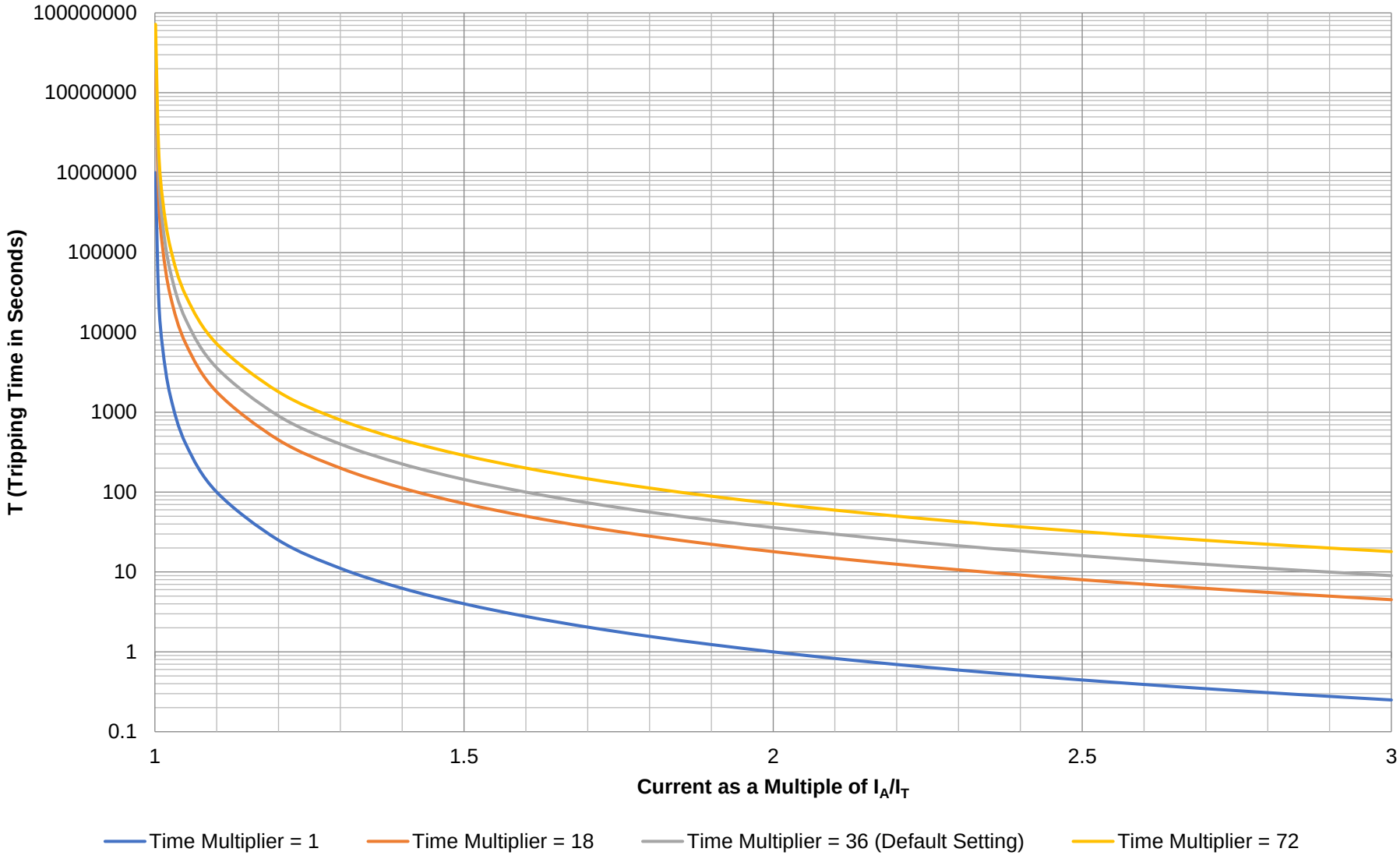

6.9 SHORT CIRCUIT IDMT ALARM

If the *Short Circuit Alarm* is enabled, the controller begins following the IDMT 'curve' when the current on any phase passes the *Trip* setting.

If the *Trip* is surpassed for an excess amount of time, the *IDMT Alarm* triggers (*Shutdown* or *Electrical trip* as selected in *Action*).

The larger the short circuit fault, the faster the trip. The speed of the trip is dependent upon the fixed formula:

$$T = \frac{t \times 0.14}{\left(\left(\frac{I_A}{I_T}\right)^{0.02} - 1\right)}$$

Where:

T is the tripping time in seconds (accurate to +/- 5% or +/- 50 ms (whichever is greater))
I_A is the actual measured current
I_T is the trip point setting in current
t is the time multiplier setting

The settings shown in the example below are a screen capture of the DSE factory settings, taken from the DSE Configuration Suite software.

NOTE: Due to large inrush currents from certain loads, such as motors or transformers, the default settings for the *Short Circuit* alarm may need adjusting to compensate.

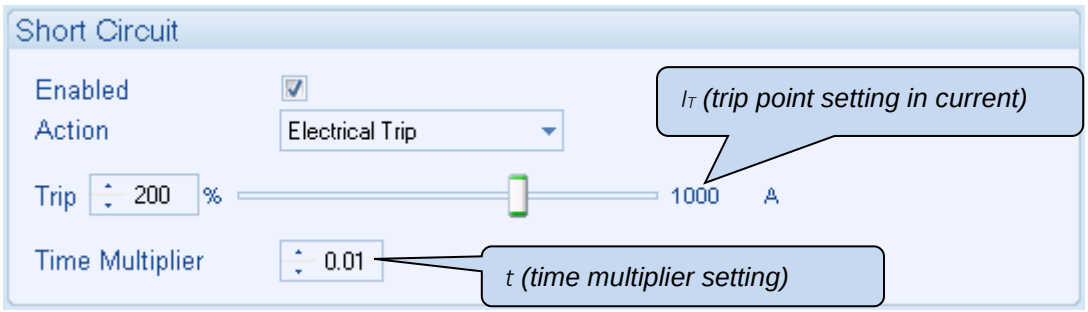

The effect of a short circuit on the generator is that the alternator stator and rotor begin to overheat; the aim of the *IDMT alarm* is to prevent the stator and rotor being overload (heated) too much. The amount of time that the alternator can be safely overloaded is governed by how high the short circuit condition is.

For further details on the *Thermal & Magnetic Damage Curve* of your alternator, refer to the alternator manufacturer and generator supplier.

6.9.1 CREATING A SPREADSHEET FOR THE SHORT CIRCUIT IDMT CURVE

The formula used:

$$T = \frac{t \times 0.14}{\left(\left(\frac{I_A}{I_T}\right)^{0.02} - 1\right)}$$

Where:

T is the tripping time in seconds (accurate to +/- 5% or +/- 50 ms (whichever is greater))
I_A is the actual measured current
I_T is the trip point setting in current
t is the time multiplier setting

The equation can be simplified for addition into a spreadsheet. This is useful for 'trying out' different values of t *(time multiplier setting)* and viewing the results, without actually testing this on the generator.

	A	B	C	D	E	F
1		1.01	1.02	1.03	1.05	1.06
2	0.01	7.034242	25	11.11111	4	2.777778

I_A/I_T (multiple of the Trip setting from 1.01 to 3.0 in steps of 0.1)

t (time multiplier setting)

T (tripping time in seconds)

The formula for the *Tripping Time* cells is:

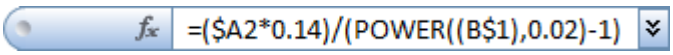

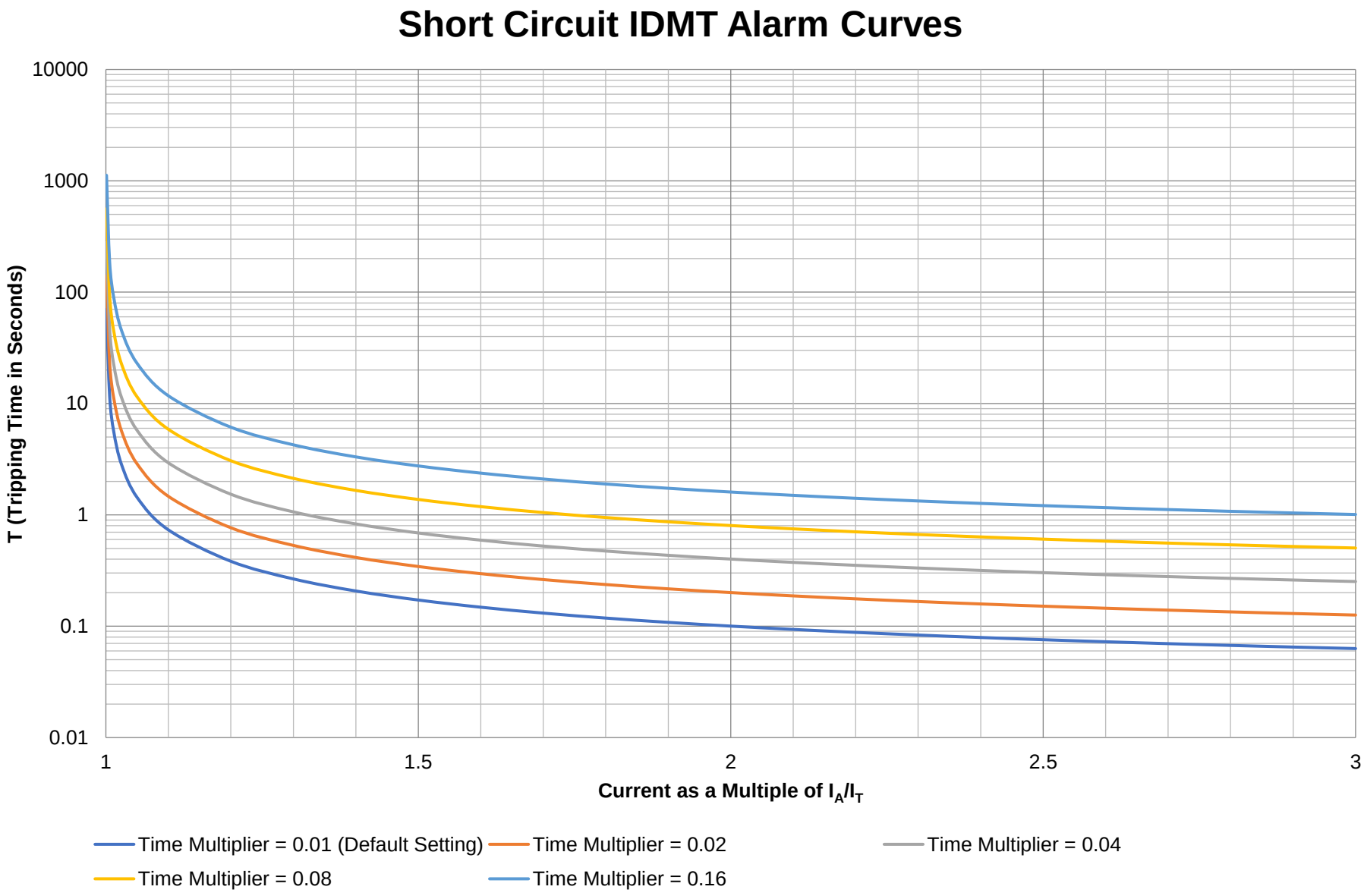
Short Circuit IDMT Alarm Curves
10000
1000
100
10
1
0.1
0.01
T (Tripping Time in Seconds)
1
1.5
2
2.5
3
Current as a Multiple of I_A/I_T
Time Multiplier = 0.01 (Default Setting)
Time Multiplier = 0.02
Time Multiplier = 0.04
Time Multiplier = 0.08
Time Multiplier = 0.16

6.10 EARTH FAULT IDMT ALARM

When the module is suitably connected using the 'Earth Fault CT'. The module measures Earth Fault and can optionally be configured to generate an alarm condition (shutdown or electrical trip) when a specified level is surpassed.

If the *Earth Fault Alarm* is enabled, the controller begins following the IDMT 'curve' when the earth fault current passes the *Trip* setting.

If the *Trip* is surpassed for an excess amount of time, the *IDMT Alarm* triggers (*Shutdown* or *Electrical Trip* as selected in *Action*).

The larger the earth fault, the faster the trip. The speed of the trip is dependent upon the fixed formula:

$$T = \frac{t \times 0.14}{\left(\left(\frac{I_A}{I_T}\right)^{0.02} - 1\right)}$$

Where:

T is the tripping time in seconds (accurate to +/- 5% or +/- 50ms (whichever is greater))
I_A is the actual measured current
I_T is the trip point setting in current
t is the time multiplier setting

The settings shown in the example below are a screen capture of the DSE factory settings, taken from the DSE Configuration Suite software.

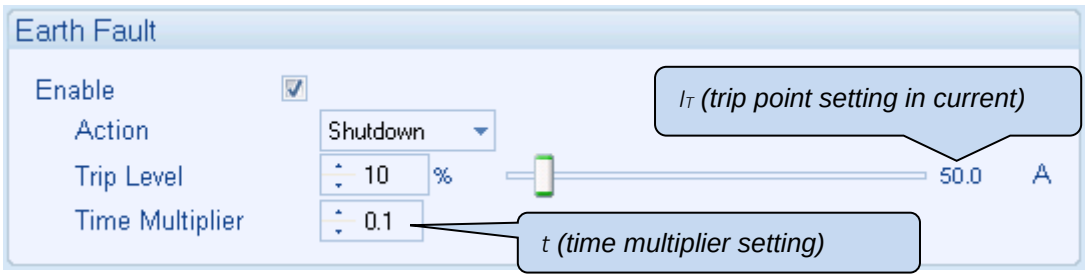

6.10.1 CREATING A SPREADSHEET FOR THE EARTH FAULT IDMT CURVE

The formula used:

$$T = \frac{t \times 0.14}{\left(\left(\frac{I_A}{I_T}\right)^{0.02} - 1\right)}$$

Where:

T is the tripping time in seconds (accurate to +/- 5% or +/- 50 ms (whichever is greater))
I_A is the actual measured current
I_T is the trip point setting in current
t is the time multiplier setting

The equation can be simplified for addition into a spreadsheet. This is useful for 'trying out' different values of t *(time multiplier setting)* and viewing the results, without actually testing this on the generator.

	A	B	C	D	E	F
1		1.01	1.02	1.03	1.05	1.06
2	0.1	70.34242	250	111.1111	40	27.77778

I_A/I_T (multiple of the Trip setting from 1.01 to 3.0 in steps of 0.1)

t (time multiplier setting)

T (tripping time in seconds)

The formula for the *Tripping Time* cells is:

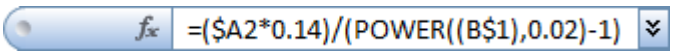

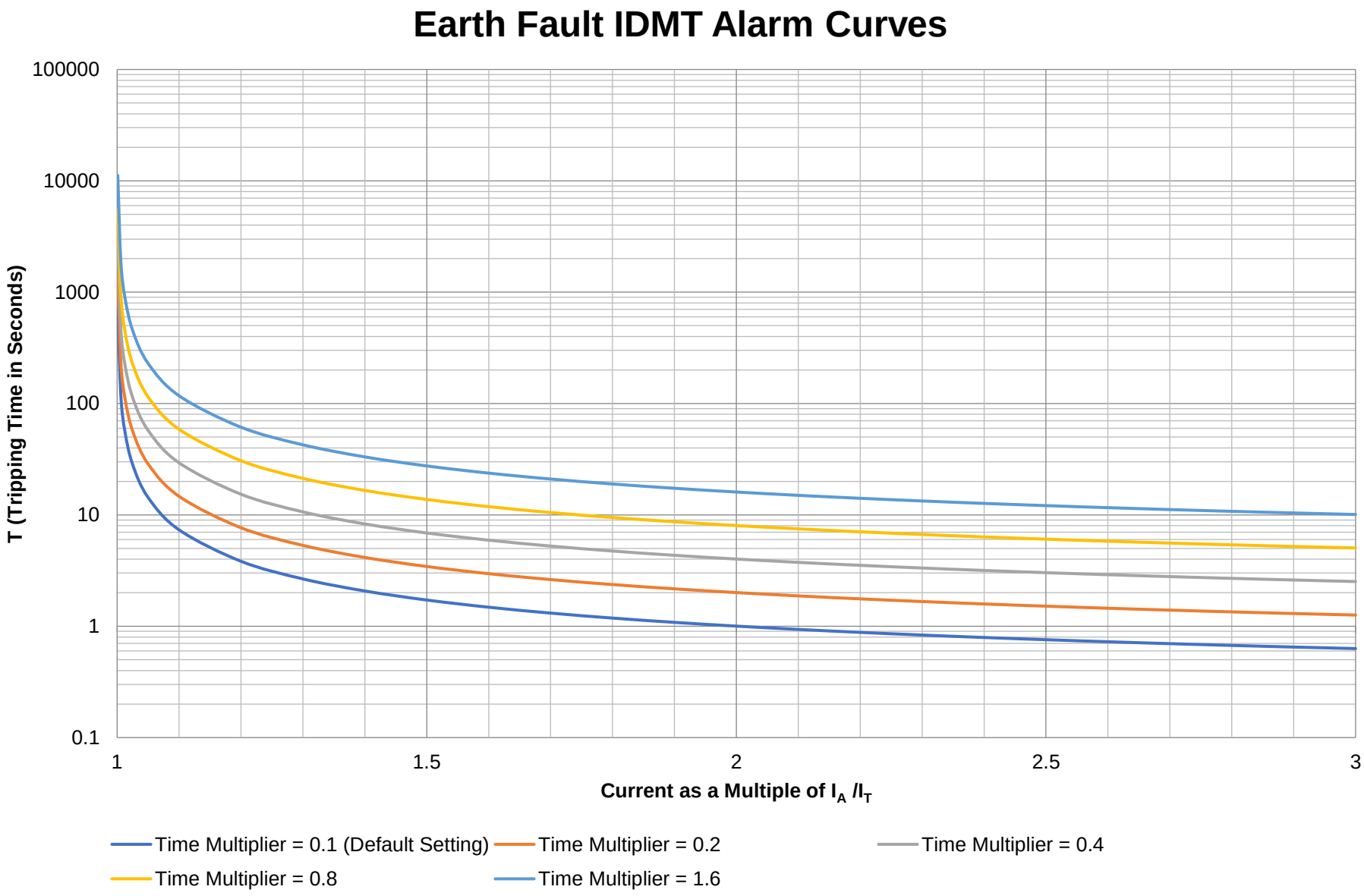
Earth Fault IDMT Alarm Curves
100000
10000
1000
100
10
1
0.1
T (Tripping Time in Seconds)
1
1.5
2
2.5
3
Current as a Multiple of I_A /I_T
Time Multiplier = 0.1 (Default Setting)
Time Multiplier = 0.2
Time Multiplier = 0.4
Time Multiplier = 0.8
Time Multiplier = 1.6

6.11 DEFAULT CURRENT PROTECTION TRIPPING CHARACTERISTICS

The graph on the following page shows the default settings for the IDMT tripping curves for the *Over Current, Short Circuit* and *Earth Fault* protections.

The default setting for the *Over Current* alarm allows for an overload of an alternator to the limits of the *Typical Brushless Alternator* whereby 110% overload is permitted for 1 hour or 200% overload is permitted for 36 seconds. In an over current situation, the alternator begins to overheat. The aim of the *Over Current IDMT Alarm* is to prevent the windings being overload (heated) too much. The amount of time that the alternator can be safely overloaded is governed by how high the overload condition is.

The default setting for the *Short Circuit* alarm allows for an alternator to supply a high current caused by a genuine short circuit or an inrush current of a motor/transformer. Whereby 300% overload is permitted for 0.17 seconds or 600% overload is permitted for 0.06 seconds. In a short circuit situation, the alternator begins to overheat to the point the insulation breaks down, potentially causing a fire. The aim of the *Short Circuit IDMT Alarm* is to prevent the insulation from melting due to excessive heat. The amount of time that the alternator can be safely in a short circuit condition is governed by the alternator's construction.

The default setting for the *Earth Fault* alarm allows for an alternator to supply a fault current caused by an imbalanced load, a high impedance short to earth or motor drives. Whereby anything less than 10% is considered normal (caused by imbalanced loads) and permitted, 12% fault current is permitted for 3.83 second or 20% fault current is permitted for 1 second.

DSE Default Configratuion of Over Current, Short Circuit & Earth Fault IDMT Alarm Curves

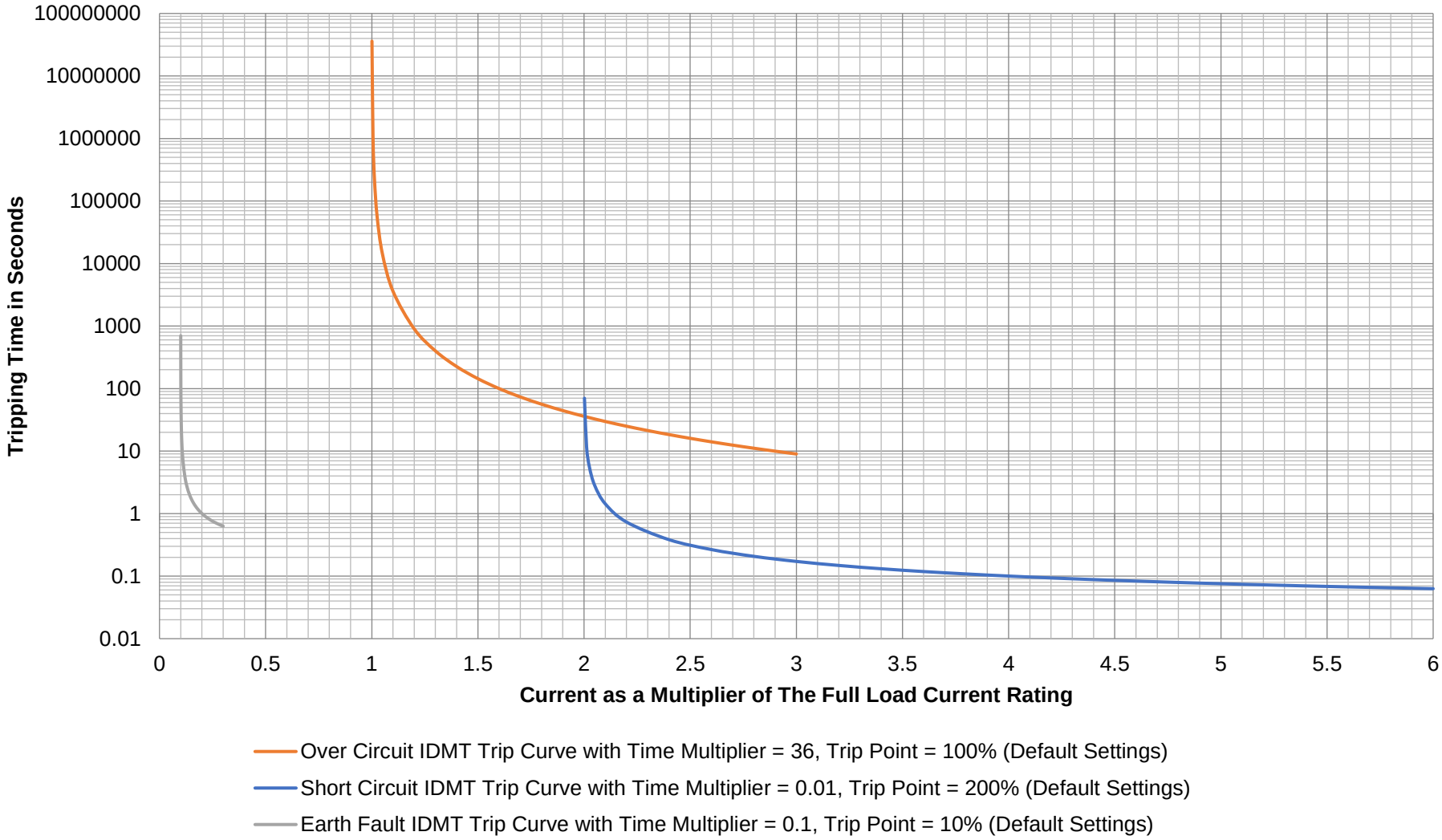

7 FRONT PANEL CONFIGURATION

This configuration mode allows the operator to fully configure the module through its display without the use of the DSE Configuration Suite PC Software.

Use the module's facia buttons to traverse the menu and make value changes to the parameters:

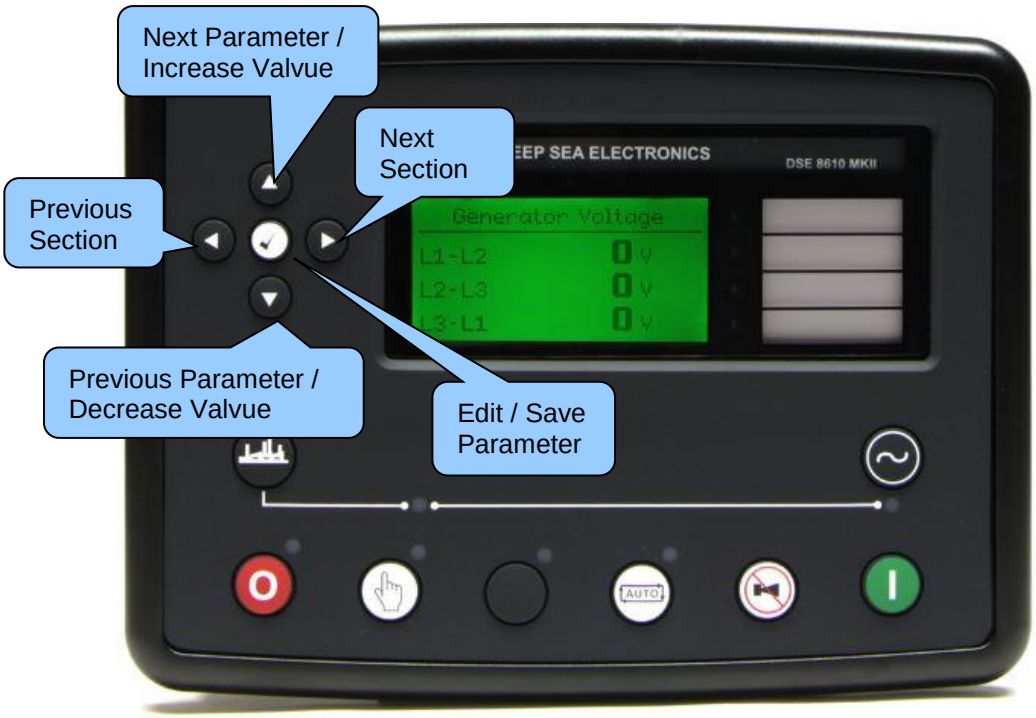

7.1 MAIN CONFIGURATION EDTIOR

7.1.1 ACESSING THE MAIN CONFIGURATION EDTIOR

NOTE: More comprehensive module configuration is possible via PC configuration software. For further details of module configuration, refer to DSE Publication: *057- 238 DSE8610 MKII Configuration Suite PC Software Manual.*

NOTE: Depending upon module configuration, some parameters in the Main Editor may not be available. For more information refer to DSE publication *057-238 DSE8610 MKII Configuration Suite PC Software Manual* available from www.deepseaelectronics.com

- Ensure the engine is at rest and the module by pressing the ***Stop/Reset Mode*** button.
- Press the ***Stop/Reset Mode*** and ***Tick*** buttons together to enter the main configuration editor.

7.1.2 ENTERING PIN

NOTE: The PIN is not set by DSE when the module leaves the factory. If the module has a PIN code set, the generator supplier has entered this. Contact the generator supplier if the code is required. If the code has been 'lost' or 'forgotten', the module must be returned to the DSE factory to have the PIN removed. A charge is made for this procedure. This procedure cannot be performed away from the DSE factory.

NOTE: The PIN is automatically reset when the editor is exited (manually or automatically) to ensure security.

- If a module security PIN has been set, the PIN request is then shown.
- Press the ***Tick*** button, the first '#' changes to '0'. Press the ***Up*** or ***Down*** buttons to adjust it to the correct value.
- Press the ***Right*** button when the first digit is correctly entered. The digit previously entered now shows as '#' for security.
- Repeat this process for the other digits of the PIN number. Press the ***Left*** button to move back to adjust one of the previous digits.
- When the ***Tick*** button is pressed after editing the final PIN digit, the PIN is checked for validity. If the number is not correct, the PIN must be re-entered.
- If the PIN has been successfully entered (or the module PIN has not been enabled), the editor is displayed.

7.1.3 EDITING A PARAMETER

NOTE: Pressing and holding the *Menu Navigation* buttons provides the auto-repeat functionality. Values can be changed quickly by holding the navigation buttons for a prolonged period of time.

- Press the ***Right*** or ***Left*** buttons to cycle to the section to view/change.
- Press the ***Up*** or ***Down*** buttons to select the parameter to view/change within the currently selected section.
- To edit the parameter, press the ***Tick*** button to enter edit mode. The parameter begins to flash to indicate editing.
- Press the ***Up*** or ***Down*** buttons to change the parameter to the required value.
- Press the ***Tick*** button to save the value. The parameter ceases flashing to indicate that it has been saved.

7.1.4 EXITING THE MAIN CONFIGURATION EDITOR

NOTE: The editor automatically exits after 5 minutes of inactivity to ensure security.

- Press and hold the ***Stop/Reset Mode*** button to exit the editor without saving changes.
- Press and hold the ***Tick*** button to exit the editor and save the changes.

7.1.5 MAIN CONFIGURATION EDITOR PARAMETERS

Section	Parameter As Shown On Display	Values
Display	Contrast	0%
	Language	English, Other.
	Current Date and Time	DD:MM:YY, hh:mm:ss
Alt Config	Default Config	Default Config / Alternative Config
Engine	Oil Pressure Low Shutdown	0.00 bar
	Oil Pressure Low Pre Alarm	0.00 bar
	Coolant Temperature Low Warning	0 ºC
	Coolant Temp High Pre Alarm	0 ºC
	Coolant Temp High Shutdown	0 ºC
	Start Delay Off Load	0 h 0 m 0 s
	Start Delay On Load	0 h 0 m 0 s
	Start Delay Telemetry	0 h 0 m 0 s
	Pre Heat Temp	0 ºC
	Pre Heat Timer	0 h 0 m 0 s
	Post Heat Temp	0 ºC
	Post Heat Timer	0 h 0 m 0 s
	Cranking	0 m 0 s
	Cranking Rest	0 m 0 s
	Safety On Delay	0 m 0 s
	Smoke Limiting	0 m 0 s
	Smoke Limiting Off	0 m 0 s
	Warming	0 h 0 m 0 s
	Cooling	0 h 0 m 0 s
	Under Speed Shutdown	Active / Inactive
	Under Speed Shutdown	0 RPM
	Under Speed Warning	Active / Inactive
	Under Speed Warning	0 RPM
	Over Speed Warning	Active / Inactive
	Over Speed Warning	0 RPM
	Over Speed Shutdown	0 RPM
	Overspeed Overshoot	0 m 0 s
	Overspeed Overshoot	0 %
	Fail To Stop Delay	0 m 0 s
	Battery Under Voltage Warning	Active / Inactive
	Battery Under Voltage Warning Delay	0 h 0 m 0 s
	Battery Under Voltage Warning	0.0 V
	Battery Over Voltage Warning	Active / Inactive
	Battery Over Voltage Warning Delay	0 h 0 m 0 s
	Battery Over Voltage Warning	0.0 V
	Charge Alternator Failure Warning	Active / Inactive
	Charge Alternator Failure Warning	0.0 V
	Charge Alternator Warning Delay	0 h 0 m 0 s
	Charge Alternator Failure Shutdown	Active / Inactive
	Charge Alternator Failure Shutdown	0.0 V
	Charge Alternator Shutdown Delay	0 h 0 m 0 s
	Droop	Active / Inactive
	Droop	0 %
	Fuel Usage Running Rate	0 %
	Fuel Usage Stopped Rate	0 %
	DPF Auto Regen Inhibit	Active / Inactive
	Specific Gravity	0.80 to 1.00
	CAN Termination	Active / Inactive

Continued over page...

Section	Parameter As Shown On Display	Values
Generator	Under Voltage Shutdown	0 V
	Under Voltage Pre-Alarm	0 V
	Loading Voltage	0 V
	Nominal Voltage	0 V
	Over Voltage Pre-Alarm	0 V
	Over Voltage Shutdown	0 V
	Under Frequency Shutdown	0.0 Hz
	Under Frequency Pre-Alarm	0.0 Hz
	Loading Frequency	0.0 Hz
	Nominal frequency	0.0 Hz
	Over Frequency Pre-Alarm	0.0 Hz
	Over Frequency Pre-Alarm	0.0 Hz
	Over Frequency Shutdown	0.0 Hz
	Full Load Rating	0 A
	kW Overload Trip	0 %
	Delayed Over Current	Active / Inactive
	Gen Over Current Trip	0 %
	AC System	3 Phase, 4 Wire
	CT Primary	0 A Power Cycle After Exit
	CT Secondary	0 A Power Cycle After Exit
	Short Circuit Trip	0 %
	Earth CT Primary	0 A
	Earth Fault Trip	Active / Inactive
	Earth Fault Trip	0 %
	Transient Delay	0.0 s
	Gen Reverse Power Delay	0.0 s
	Full kW Rating	0 kW
	Full kVAr Rating	0 kvar
	Ramp Up Rate	0 %
	Ramp Down Rate	0 %
	Load Level For More Sets	0 %
	Load Level For Less Sets	0 %
	Load Demand Priority	1
	Gen Reverse Power Trip	0 kW
	Insufficient Capacity Delay	0 m 0 s
	Insufficient Capacity Action	None / Indication / Warning / Shutdown / Electrical Trip
	Reactive Load CTL Mode	None / VAr Share / VAr Fixed Export
	Load Parallel Power	0 kW In Mains Parallel Mode
	Load Power Factor	0 % In Mains Parallel Mode
	Enable MSC Compatibility	Active / Inactive

Continued over page...

Section	Parameter As Shown On Display	Values
Timers	LCD Page Timer	0 h 0 m 0 s
	Scroll Delay	0 h 0 m 0 s
	Engine Pre Heat Timer	0 h 0 m 0 s
	Engine Post Heat Timer	0 h 0 m 0 s
	Engine Cranking	0 m 0 s
	Engine Cranking Rest	0 m 0 s
	Engine Safety On Delay	0 m 0 s
	Engine Smoke Limiting	0 m 0 s
	Engine Smoke Limiting Off	0 m 0 s
	Engine Warming	0 h 0 m 0 s
	Engine Cooling	0 h 0 m 0 s
	Engine Overspeed Overshoot	0 m 0 s
	Engine Fail To Stop Delay	0 m 0 s
	Battery Under Voltage Warning Delay	0 h 0 m 0 s
	Battery Over Voltage Warning Delay	0 h 0 m 0 s
	Return Delay	0 h 0 m 0 s
	Generator Transient Delay	0 s
Schedule	Schedule	Active / Inactive
	Schedule Bank 1 Period	Weekly / Monthly,
	On Load / Off Load / Auto Start Inhibit, Week, Start Time, Run Time and Day. Selection (1 to 8)	Press the ***Tick*** ✓ button to begin editing then up or down when selecting the different parameters.
	Schedule Bank 2 Period	Weekly / Monthly,
	On Load / Off Load / Auto Start Inhibit, Week, Start Time, Run Time and Day. Selection (1 to 8)	Press the ***Tick*** ✓ button to begin editing then up or down when selecting the different parameters.

7.2 ‘RUNNING’ CONFIGURATION EDITOR

7.2.1 ACCESSING THE ‘RUNNING’ CONFIGURATION EDITOR

NOTE: Depending upon module configuration, some parameters in the ‘Running’ Editor may not be available. For more information refer to DSE publication *057-238 DSE8610 MKII Configuration Suite PC Software Manual* available from www.deepseaelectronics.com

- The *‘Running’ Configuration Editor* is accessible without stopping the engine. All protections remain active whilst using the ‘*‘Running’ Configuration Editor*.
- Press and hold the ***Tick*** button to access the *‘Running’ Configuration Editor.*

7.2.2 ENTERING PIN

Even if a module security PIN has been set, the PIN is not requested whilst entering the *‘Running’ Configuration Editor*

7.2.3 EDITING A PARAMETER

NOTE: Pressing and holding the *Menu Navigation* buttons provides the auto-repeat functionality. Values can be changed quickly by holding the navigation buttons for a prolonged period of time.

- Press the ***Right*** or ***Left*** buttons to cycle to the section to view/change.
- Press the ***Up*** or ***Down*** buttons to select the parameter to view/change within the currently selected section.
- To edit the parameter, press the ***Tick*** button to enter edit mode. The parameter begins to flash to indicate editing.
- Press the ***Up*** or ***Down*** buttons to change the parameter to the required value.
- Press the ***Tick*** button to save the value. The parameter ceases flashing to indicate that it has been saved.

7.2.4 EXITING THE 'RUNNING' CONFIGURATION EDITOR

NOTE: The editor automatically exits after 5 minutes of inactivity to ensure security.

- Press and hold the ***Tick***  button to exit the editor and save the changes.

7.2.5 'RUNNING' CONFIGURATION EDITOR PARAMETERS

Section	Parameter As Shown On Display	Values
Display	Contrast	0 %
	Language	English, Other
	Load Demand Priority	1
	Commissioning Screens	Active / Inactive
	Override Starting Alarms	Active / Inactive
	Voltage Adjust (manual mode only, breaker open)	0 %
	Frequency Adjust (manual mode only, breaker open)	0 %
	Mains Decoupling Test Mode	Active / Inactive
Engine	Governor Gain	0.0
	Frequency Adjust Offset	0.0 Hz
	DPF Auto Regen Inhibit	Active / Inactive
	DPF Manual Regen	Active / Inactive
Power Levels	Power Control Mode	Const Power / Frequency-Power / Voltage-Power
	kVAr Control Mode	Const Power Factor / Voltage-Reactive Power / Power-Power Factor / Const Reactive Power
	Load Parallel Power	0 %
	Load Parallel kVAr	0 %
	Load Parallel PF	0.00 pf
	Frequency Droop Offset	0.00 % (0.00 Hz)
	Freq. Droop Ramp Rate	0.0 %
	Voltage Droop Offset	0.00 % (0.0 V)
	Voltage Droop Ramp Rate	0.0 %

8 COMMISIONING

NOTE: If satisfactory operation cannot be achieved, despite repeated checking of the connections between the module and the system, then contact DSE Technical Support Department: support@deepseaelectronics.com

8.1 BASIC CHECKS

NOTE: If Emergency Stop feature is not required, link the input to the DC Positive.

Before the system is started, it is recommended that the following checks are made:

1. The unit is adequately cooled and all the wiring to the module is of a standard and rating compatible with the system. Check all mechanical parts are fitted correctly and that all electrical connections (including earths) are sound.

2. The unit DC supply is fused and connected to the battery and that it is of the correct polarity.

3. The Emergency Stop input is wired to an external normally closed switch connected to DC positive.

4. To check the start cycle operation, take appropriate measures to prevent the engine from starting (disable the operation of the fuel solenoid). After a visual inspection to ensure it is safe to proceed, connect the battery supply. Press the ***Manual Mode*** button followed by the ***Start*** button the unit start sequence commences.

5. The starter engages and operates for the pre-set crank period. After the starter motor has attempted to start the engine for the pre-set number of attempts, the LCD displays *Failed to Start*. Press the ***Stop/Reset Mode*** button to reset the unit.

6. Restore the engine to operational status (reconnect the fuel solenoid). Press the ***Manual Mode*** button followed by the ***Start*** button. This time the engine should start and the starter motor should disengage automatically. If not then check that the engine is fully operational (fuel available, etc.) and that the fuel solenoid is operating. The engine should now run up to operating speed. If not, and an alarm is present, check the alarm condition for validity, then check input wiring. The engine should continue to run for an indefinite period. It is possible at this time to view the engine and alternator parameters - refer to the 'Description of Controls' section of this manual.

7. Press the ***Auto Mode*** button, the engine runs for the pre-set cooling down period, then stop. The generator should stay in the standby mode. If it does not, check that the *Remote Start* input is not active.

8. Initiate an automatic start by supplying the remote start signal (if configured). The start sequence commences and the engine runs up to operational speed. Once the generator is available the delayed load outputs activate, the Generator accepts the load. If not, check the wiring to the delayed load output contactors. Check the Warming timer has timed out.

9. Remove the remote start signal. The return sequence begins. After the pre-set time, the generator is unloaded. The generator then runs for the pre-set cooling down period, then shutdown into its standby mode.

10. Set the modules internal clock/calendar to ensure correct operation of the scheduler and event logging functions. For details of this procedure see section entitled *Front Panel Configuration.*

8.2 DSE 4 STEPS TO SUCCESSFUL SYNCHRONISING

Synchronising and load sharing is often considered to be a complex subject. In fact, it is very simple when broken down into smaller steps.

After following the *Commissioning* section of this manual, the *DSE 4 Steps* **must** be followed before any parallel operation is attempted.

The following information covers the *DSE 4 Steps to Successful Synchronising* in full detail and must be completed on all generators in the system before they are placed in parallel with each other.

Once in parallel, further commissioning may be required to fine tune the Gain (P), Stability (I) and Derivative (D) of the governor/AVR and DSE module.

8.2.1 CONTROL

CAUTION!: Failure to perform the *Control* steps results in poor control over the engine and alternator. This causes long and unstable synchronising as well as unstable kW and kvar load sharing.

NOTE: For further details of module configuration, refer to DSE Publication: 057-238 *DSE8610 MKII Configuration Suite PC Software Manual.*

Continued overleaf…

8.2.1.1 DETERMINING CONNECTIONS AND SETTINGS FOR GOVERNORS

Setting up the Governor (Adjustment of SW1 and SW2)

Before You Start

1. Ensure that generator bus is not live, has no load connected, the other generator's breakers are open, and the *Frequency Droop* function and *Mains Parallel Mode* digital input within the module are disabled.
2. With the generator breaker open, set the generator to run at the **Nominal Frequency** without the DSE module connected to the Governor. To achieve this, you will have to adjust the settings on the governor.
3. Stop the generator and connect the DSE module to the Governor. The DSE controller connects only to the "-" and "IN" terminals and provides the varying DC voltage to simulate the turning of a potentiometer. The Analogue output terminals of the DSE controller are connected as follows. Note that the "+" terminal of the governor is left unconnected.

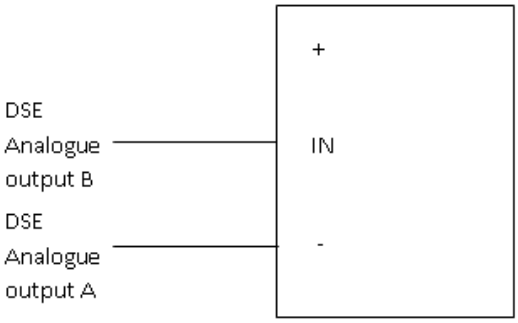

4. With the generator stationary, adjust the Governor SW1 setting to 10 and measure the voltage across the "-" and "IN" governor terminals. Assuming the sensing probes had the correct polarity, the voltage across the "-" and "IN" governor terminals should be roughly +5 V. If this is not the case, check the polarity of the wiring and sensing probes.
5. Once successful, reset the Governor SW1 setting back to 0.

Adjustment of Governor SW1

6. Start the generator and ensure that the breaker is left open.
7. Check the direction of drive by increasing and decreasing SW1. If the frequency increases whilst SW1 is being decreased, enable the option 'Output Reversed'. If moving SW1 does not change the frequency, check the wiring to the governor for faults or, ensure the *Enhanced J1939* option is enabled and the *CAN Source Address* is correct within the module when connected to an ECU.

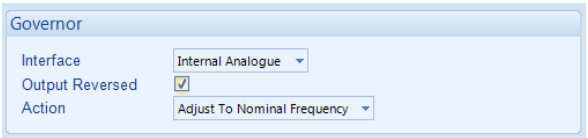

8. Adjust the SW1 setting for the Governor until the generator runs at **Nominal Frequency (50 Hz or 60 Hz)**
9. Stop the generator. SW1 is now complete and must not be adjusted further.

Adjustment of Governor SW2

NOTE: If it is not possible to achieve ±2.5 Hz adjustment with the governor, contact DSE Technical Support for further advice: support@deepseaelectronics.com

10. Increase the setting of the Nominal Frequency by **2.5 Hz** (52.5 Hz or 62.5 Hz).
    If *Frequency Droop* is enabled, increase the Nominal Frequency by the **Maximum Frequency Difference From Nominal** (Max Hz Up) within the *Droop Curve*. For example, if the *Droop Curve* is 52 Hz down to 49 Hz, increase the Nominal Frequency by 2 Hz.

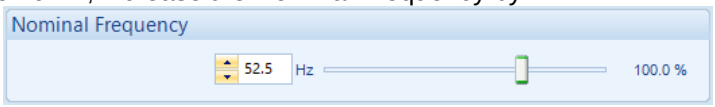

11. Start the generator. With the breaker open the generator will run at setting of SW1 (50 Hz or 60 Hz).
12. Once the generator is detected as available, close the generator breaker onto a **DEAD BUS BAR WITH NO LOADS** connected. The generator frequency shall start to increase towards the new Nominal Frequency setting (52.5 Hz or 62.5 Hz or Max Hz Up), however it may not achieve this.
13. Adjust SW2 until the frequency increases to the new Nominal Frequency (52.5 Hz or 62.5 Hz or Max Hz Up).
14. Keep adjusting SW2 further to ensure Governor Drive reads between **75% to 85%**, the sign of the drive (+ or - percentage) does not matter. If the Governor Drive is between 100% and 85%, increase the SW2 setting until the Governor Drive reads ideally 80%. If the Governor Drive is between 75% and 0%, decrease the SW2 setting until the Governor Drive reads ideally 80%.

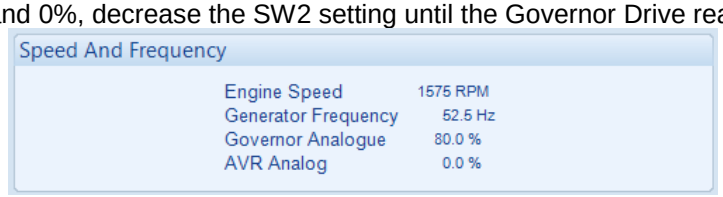

15. Open the generator breaker and stop the generator.
16. Decrease the setting of the Nominal Frequency by **2.5 Hz** (47.5 Hz or 57.5 Hz). If *Frequency Droop* is enabled, decrease the Nominal Frequency by the **Maximum Frequency Difference From Nominal** (Max Hz Down) within the *Droop Curve*. For example, if the *Droop Curve* is 52 Hz down to 49 Hz, decrease the Nominal Frequency by 2 Hz.

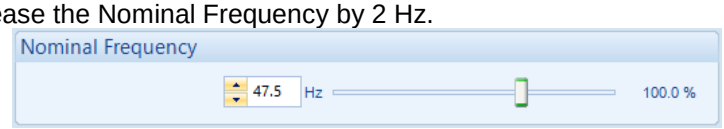

17. Start the generator. With the breaker open the generator will run at setting of SW1 (50 Hz or 60 Hz).
18. Once the generator is detected as available, close the generator breaker onto a **DEAD BUS BAR WITH NO LOADS** connected. The generator frequency shall start to decrease towards the new Nominal Frequency (47.5 Hz or 57.5 Hz or Max Hz Down).
19. SW2 is then adjusted further to ensure Governor Drive reads within **75% to 85%**, the sign of the drive (+ or - percentage) does not matter. If the Governor Drive is between 100% and 85%, increase the SW2 setting until the Governor Drive reads ideally 80%. If the Governor Drive is between 75% and 0%, decrease the SW2 setting until the Governor Drive reads ideally 80%.
    NOTE: Any change made to the driving down percentage will be made to the driving up percentage. For example, if the driving down percentage is increased by 5% (70% to 75%), the driving up percentage will also increase by 5% (80% to 85%).

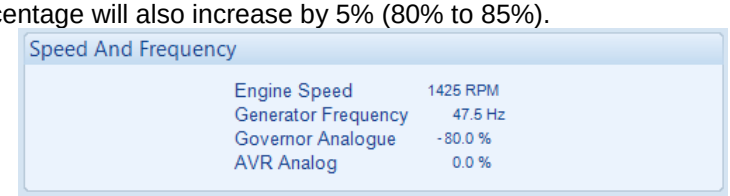

20. Change the setting of the Nominal Frequency back to the actual Nominal Frequency (50 Hz or 60 Hz).

8.2.1.2 DETERMINING CONNECTIONS AND SETTINGS FOR AVRS

NOTE: Determining the settings of SW1 and SW2 for the AVR MUST only be done once the setup for SW1 and SW2 for the governor has been complete. Changing engine speed affects the level of voltage produced.

Before You Start

1. Ensure that generator bus is not live, has no load connected, the other generator's breakers are open, and the *Voltage Droop* function and *Mains Parallel Mode* digital input within the module are disabled.
2. With the generator breaker open, set the generator to run at the **Nominal Voltage** without the DSE module connected to the AVR. To achieve this, you will have to adjust the settings on the AVR.
3. Stop the generator and connect the DSE module to the AVR. The DSE controller connects only to the "-" and "IN" terminals and provides the varying DC voltage to simulate the turning of a potentiometer. The Analogue output terminals of the DSE controller are connected as follows. Note that the "+" terminal of the AVR is left unconnected.

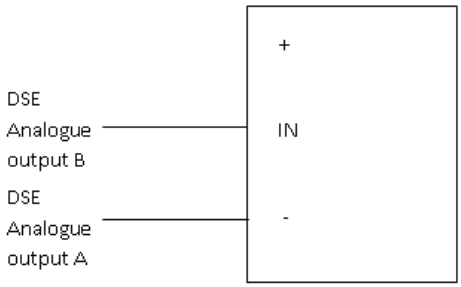

4. With the generator stationary, adjust the AVR SW1 setting to 10 and measure the voltage across the "-" and "IN" AVR terminals. Assuming the sensing probes had the correct polarity, the voltage across the "-" and "IN" AVR terminals should be roughly +5 V. If this is not the case, check the polarity of the wiring and sensing probes.
5. Once successful, reset the AVR SW1 setting back to 0.

Adjustment of AVR SW1

6. Start the generator and ensure that the breaker is left open.
7. Check the direction of drive by increasing and decreasing SW1. If the voltage increases whilst SW1 is being decreased tick the option 'Output Reversed'. If moving SW1 does not change the voltage, check the wiring to the AVR for faults.

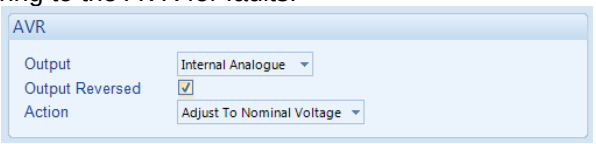

8. Adjust the SW1 setting for the AVR until the generator runs at **Nominal Voltage (230V for example).**
9. Stop the generator. SW1 is now complete and must not be adjusted further.

Adjustment of AVR SW2

NOTE: If it is not possible to achieve ±10 % voltage adjustment with the AVR, contact DSE Technical Support for further advice: support@deepseaelectronics.com

10. Increase the setting of the Nominal Voltage by 10% (230 V to 253 V for example). If Voltage Droop is enabled, increase the Nominal Voltage by the **Maximum Voltage Difference From Nominal** (Max Volt Up) within the Droop Curve. For example, if the *Droop Curve* is 240 V down to 225 V, increase the Nominal Frequency by 10 V.

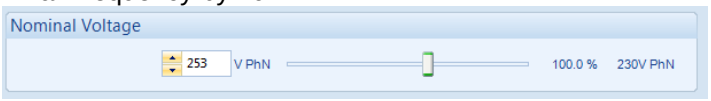

11. Start the generator. With the breaker open the generator will run at setting of SW1 (230 V for example).
12. Once the generator is detected as available, close the generator breaker onto a **DEAD BUS BAR WITH NO LOADS** connected. The generator voltage shall start to increase towards the new Nominal Voltage setting (+10% [253 V for example] or Max Volt Up), however it may not achieve this.
13. Adjust SW2 to until the voltage increases to the new Nominal Frequency ((+10% [253 V for example] or Max Volt Up).
14. Keep adjusting SW2 further to ensure AVR Drive reads between **75% to 85%**, the sign of the drive (+ or - percentage) does not matter. If the AVR Drive is between 100% and 85%, increase the SW2 setting until the AVR Drive reads ideally 80%. If the AVR Drive is between 75% and 0%, decrease the SW2 setting until the AVR Drive reads ideally 80%.

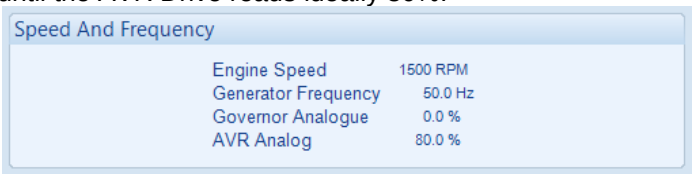

15. Open the generator breaker and stop the generator.
16. Decrease the setting of the Nominal Voltage by **10%** (230 V to 207 V for example). If *Voltage Droop* is enabled, decrease the Nominal Voltage by the **Maximum Voltage Difference From Nominal** (Max Volt Down) within the *Droop Curve*. For example, if the *Droop Curve* is 240 V down to 225 V, decrease the Nominal Frequency by 10 V.

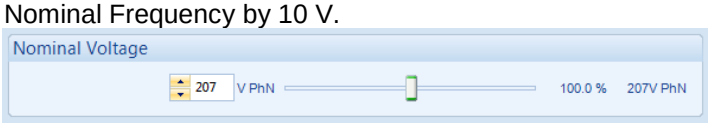

17. Start the generator. With the breaker open the generator will run at setting of SW1 (230V for example).
18. Once the generator is detected as available, close the generator breaker onto a **DEAD BUS BAR WITH NO LOADS** connected. The generator voltage shall start to decrease towards the new Nominal Voltage ((-10% [207 V for example] or Max Volt Down)
19. SW2 is then adjusted further to ensure AVR Drive reads within **75% to 85%**, the sign of the drive (+ or - percentage) does not matter. If the AVR Drive is between 100% and 85%, increase the SW2 setting until the AVR Drive reads ideally 80%. If the AVR Drive is between 75% and 0%, decrease the SW2 setting until the AVR Drive reads ideally 80%.
    NOTE: Any change made to the driving down percentage will be made to the driving up percentage. For example, if the driving down percentage is increased by 5% (70% to 75%), the driving up percentage will also increase by 5% (80% to 85%).

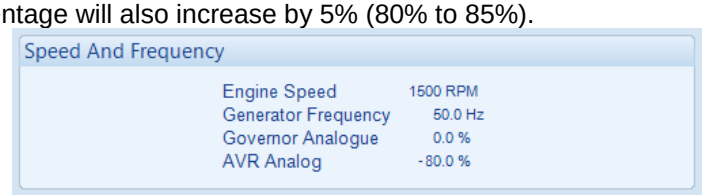

20. Change the setting of the Nominal Voltage back to the actual Nominal Voltage (230 V for example).

8.2.2 METERING

WARNING!: Do not disconnect the CT wires from the DSE module when the CTs are carrying current. Disconnection open circuits the secondary of the CT's and dangerous voltages may then develop. Always ensure the CTs are not carrying current and the CTs are short circuit connected before making or breaking connections to the module.

CAUTION!: Failure to perform the Metering steps results in incorrect power factor and kW calculations leading to problems with kW and kvar load sharing if not corrected.

8.2.2.1 CTS ON THE RIGHT PHASE

Check to ensure that the CTs on L1, L2 & L3 are connected to their respective connection on the DSE module.

1. Ensure that generator bus is not live and the other generator's breakers are open.
2. Start the generator and once available, close the generator breaker.
3. Apply purely resistive load (around 10% of the generator's size) across the three phases.
4. If the CTs on L1, L2 & L3 are wired to the correct terminals on the module, it displays unity power factor (1.0 pf) across all three phases. If unity power factor (1.0 pf) is not displayed across all three phases, the CTs have been wired to the wrong phases on the module.

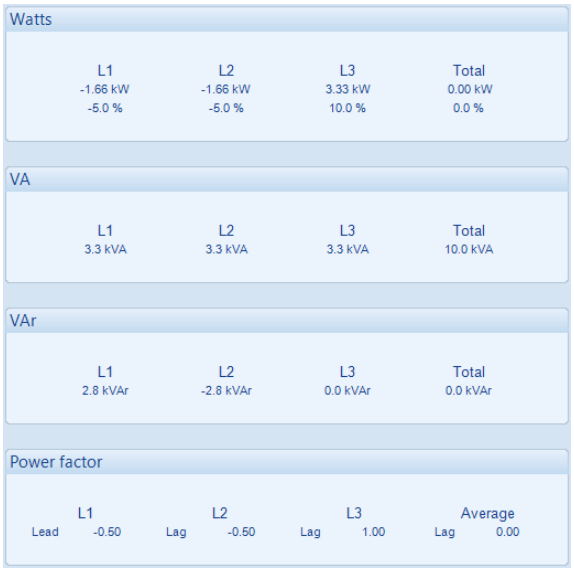

Cables from the CTs on L1 and L2 are swapped over at the module's terminals.

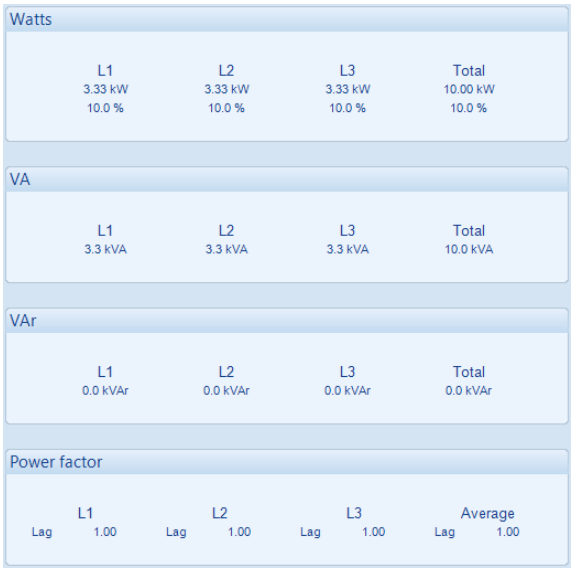

Cables from the CTs on L1 and L2 are connected correctly to module's terminals.

8.2.2.2 CTS IN THE RIGHT DIRECTION

NOTE: Checking that the CTs are on the right phase MUST be completed prior to checking if the CTs are in the correct direction. CTs on the wrong phase also cause negative kWs.

Check to ensure that the CTs on L1, L2 & L3 have been mounted for the correct orientation for current flow and that the s1 and s2 have not been swapped over.

1. Ensure that the CTs are connected on the correct phase by performing the previous test.
2. Ensure that generator bus is not live and the other generator's breakers are open.
3. Start the generator and once available, close the generator breaker.
4. Apply purely resistive load (around 10% of the generator's size) across the three phases.
5. If the CT's S1 and S2 are wired to correctly to the DSE module, it displays positive kW. If negative kWs is displayed, the CTs' s1 and s2 have been swapped around.

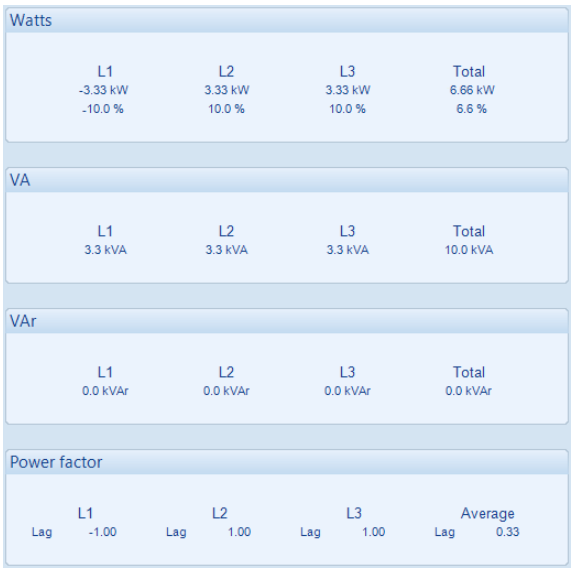

The CT on L1 has been mounted with the incorrect orientation, or the s1 and s2 connections on the CT have been swapped over.

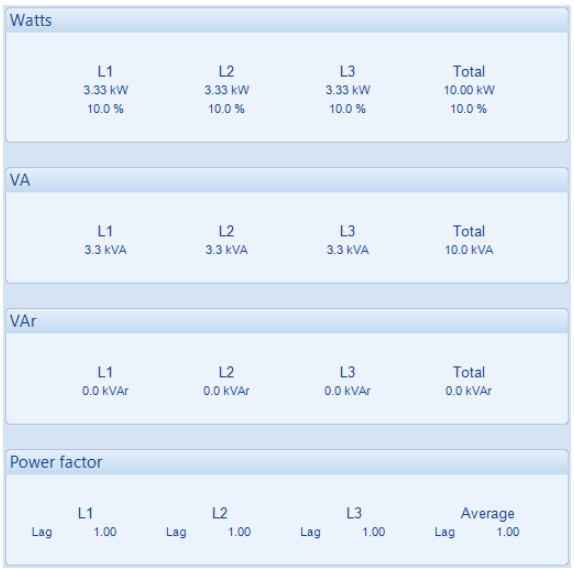

The CT on L1 has been mounted and wired correctly

8.2.3 COMMUNICATIONS

CAUTION!: Failure to perform the Communications steps results in the controllers being unable to communicate to the other DSE controllers leading to problems during load sharing.

NOTE: For further details of module configuration, refer to DSE Publication: 057-238 *DSE8610 MKII Configuration Suite PC Software Manual.*

Check to ensure that all the modules are connected are communicating correctly on the MSC link and Redundant MSC (if used).

This is tested by connecting the DSE module to a PC with the DSE Configuration Suite PC Software installed and going to the *SCADA* | *Generator* | *Multi-Set* section. The information shown in this section changes dynamically depending on whether the MSC Link or Redundant MSC Link is in use. The number of *Sets On The Bus* must be the same as the number of DSE8x10s on the link. The number of *Mains Controllers ON The Bus* must be the same as the combined number of DSE8x60s and DSE8x80s on the link.

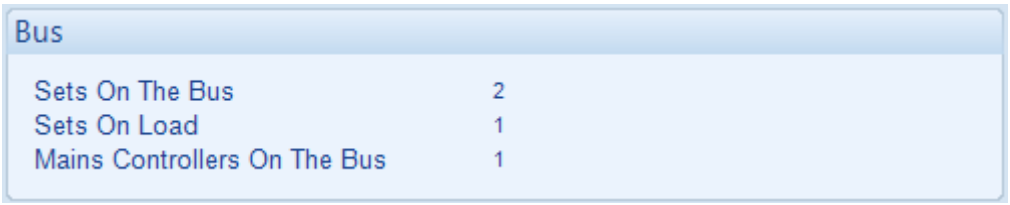

If these numbers do not match up there is a fault on the active link. To find the module with the fault, connect into each module individually until the *Sets On The Bus* or *Mains Controllers ON The Bus* reports 1. Check the wiring to the module that reports only 1 module on the MSC link, ensuring that the H and L are connected the correct way around and the 120 Ω termination resistors are correctly fitted.

If these numbers do match up, then the link which is currently in use is working correctly. To test the redundant MSC link, remove the active link connection from any module. All the modules should then alarm with the same number link failure (*MSC 1 Link Failure or MSC 2 Link Failure*). If all the modules do not have the same number link failure then at some point the MSC and CAN connections have been crossed. If all the modules do have the same number link failure, the communication is automatically transferred onto the other link. Check the numbers in SCADA again to ensure the other link is operating correctly.

8.2.4 SYNC CHECKS

CAUTION!: Failure to perform the Sync Check steps results in in serious damage to the system (breakers, bus bars, alternators, engines etc) caused by out of sync closures.

Check to ensure that all the module's sensing cables have been connected to the correct phases and that the generator's load switch has been correctly connected. Failing to perform such tests may lead to the DSE module sensing both sides of the breaker as in sync

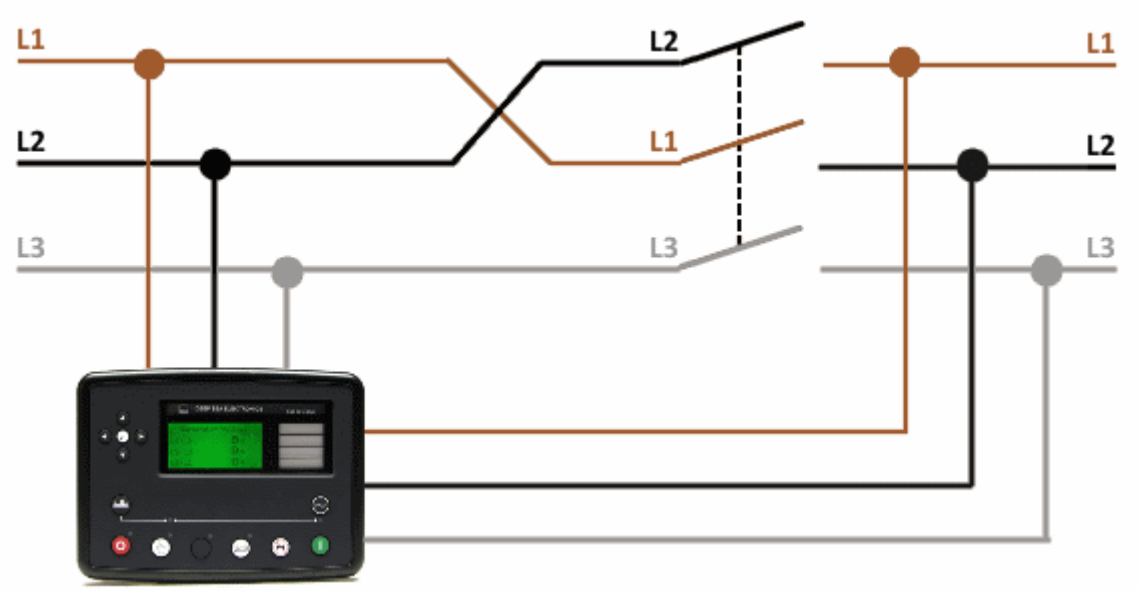

This is tested by starting the generator with the DSE module and ensuring the generator load switch is left open (activate an input configured for *Generator Load Inhibit*). Then the generator common bus is to be made live, this is achieved by starting another generator and closing its load switch. Across the open load switch, connect a voltage meter to measure the AC voltage when the DSE module shows the two supplies in sync.

8.2.4.1 INCORRECTLY WIRED BREAKER

When the DSE module's synchroscope shows the two supplies in sync, if the voltage meter shows a voltage difference the breaker is wired incorrectly. This is shown in the example below.

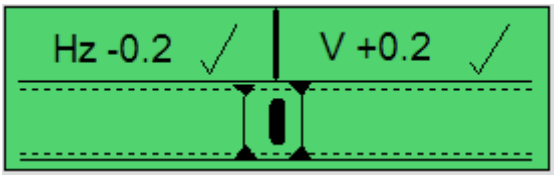

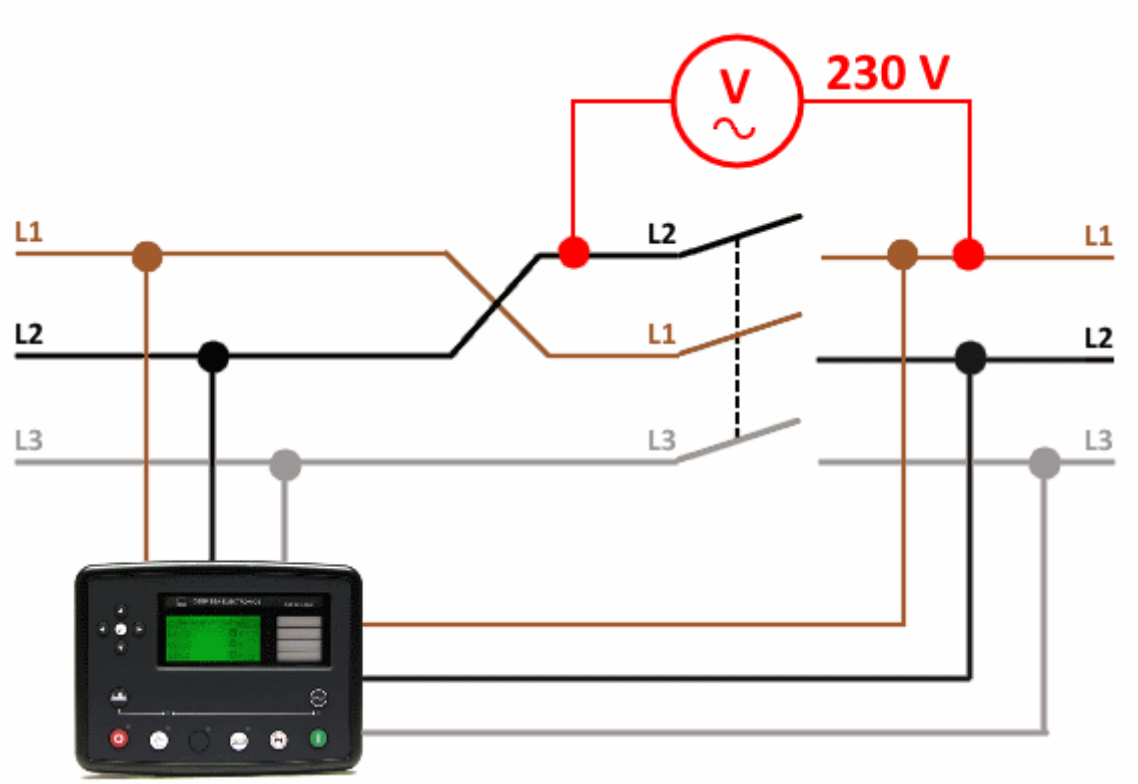

8.2.4.2 CORRECTLY WIRED BREAKER

When the DSE module's synchroscope shows the two supplies in sync, if the voltage meter shows no voltage difference the breaker is wired correctly. This is shown in the example below.

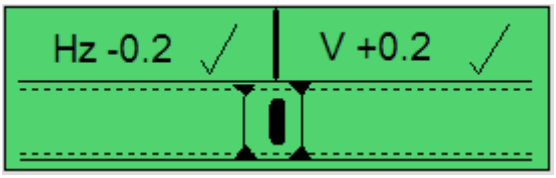

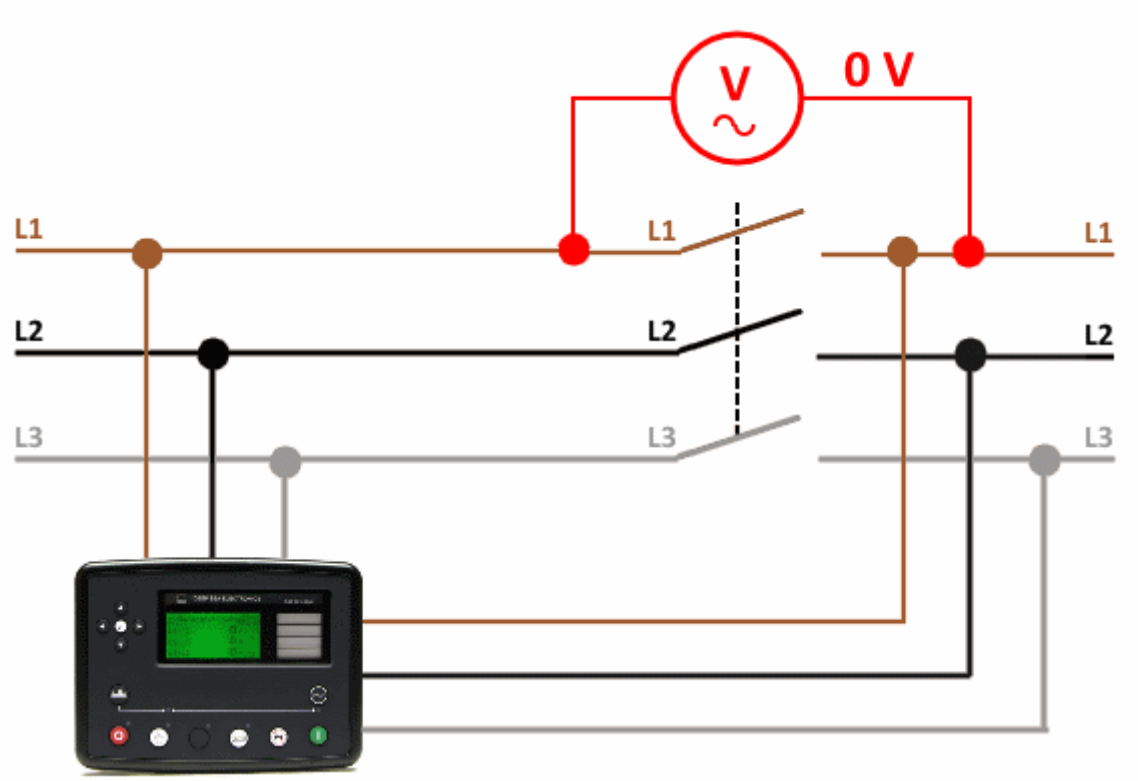

8.3 DSE STEPS TO SUCCESSFUL LOADSHARING

Synchronising and load sharing is often considered to be a complex subject. In fact, it is very simple when broken down into smaller steps.

Before parallel operation between generators or another electrical supply is attempted, the *DSE Four Steps to Successful Synchronising* **must** be followed and completed on each of the generators.

The following information covers the *DSE Steps to Successful Loadsharing*, detailing the procedure to fault find and fine tune loadsharing applications.

8.3.1 EXPECTED OPERATION

8.3.1.1 ISOCHRONOUS LOADSHARING

NOTE: For further details about *Isochronous Loadsharing* operation, refer to section entitled *Prime Power (Load Share)* elsewhere within this document.

When generators are running in parallel isochronously (zero droop), the amount of power they produce to the load is controlled to ensure each generator is doing an equal amount of work, whilst still running at nominal frequency and voltage.

It is the job of the DSE8x10 to make precise changes to the amount of power supplied to the resistive element (*Active Power (kW)*) and capacitive/inductive element (*Reactive Power (kvar)*) by each generator. The DSE8x10 modules communicate with one another using the MSC link, passing information and instructions between themselves to ensure they produce equal percentage of their full load rating. This process is displayed on the module's *Commissioning Screen,* found at the bottom of the *Generator* section of the module's display.

In the example below, the MSC link has derived that the total load equates to both generators running at 80% of their kW rating and 40% of their kvar rating. Hence, the value of target kW is 80% and the value for target (tgt) kvar is 40%.
Each DSE8x10 then regulates their generator's kW and kvar production to match their respective target values. In a correctly commissioned system with a steady load, the actual kW/kvar percentage would be within ±1 % of the target kW/kvar percentage. This results in a maximum difference between generators of 2%. The DSE8x10 modules achieve this by adjusting the *Gov* percentage to affect kWs and the *AVR* percentage to affect kvars. Typical magnitudes of the *Gov* and *AVR* percentage at full load, with the switchgear closed and running in parallel are as follows:

- No more than 10% when there is no external droop enabled
- No more than 30% when external droop is enabled

Generator 1

Tgt	80.0%	kW	81.0%
Tgt	40.0%	kVAr	39.0%
Pf	0.94	Ramp	80.0%
Gov	5.1%	Avr	3.5%

Generator 2

Tgt	80.0%	kW	79.0%
Tgt	40.0%	kVAr	41.0%
Pf	0.93	Ramp	80.0%
Gov	4.6%	Avr	3.7%

If the actual kW/kvar percentage is not within ±1 % of the target kW/kvar percentage, and the target kW/kvar percentage is not changing with a steady load, it suggests that the *Gain (P), Stability (I)* and *Derivative (D)* settings need adjusting. Refer to section entitled *Adjusting Gain (P), Stability (I) and Derivative (D)* for further details.

If the target kW/kvar percentage is changing rapidly or remains at 0% with a steady load, repeat the *DSE Four Steps to Successful Synchronising* as it suggests there is an issue with MSC link or wiring of the CTs. Refer to section entitled *DSE Four Steps to Successful Synchronising* for further details.

8.3.1.2 DROOP LOADSHARING

NOTE: For further details about *Isochronous Loadsharing* operation, refer to section entitled *Prime Power (Load Share)* elsewhere within this document.

When generators are running in parallel in *Droop* only, the amount of power they produce to the load has to be controlled to ensure it is shared between the generators, by varying the frequency and voltage the system is running at.

It is the job of the DSE8x10's the *Droop* functions to minimise the generators power production using the configured *Droop Curve*. Typically, the *Droop Curve* on each generator is identical to ensure the generators are producing an even percentage of *Active Power* (kW) / *Reactive Power* (kvar).

The *Active Power* (kW) sharing is achieved by the *Frequency Droop*. This is done by monitoring the *Active Power* (kW) the generator produces and altering the amount of fuel supplied to the engine to adjust the *Frequency* in accordance with the *Droop Curve*. The *Reactive Power* (kvar) sharing is achieved by the *Voltage Droop*. This is done by monitoring the *Reactive Power* (kvar) the generator produces and altering the field excitation supplied to the alternator to adjust the *Voltage* in accordance with the *Droop Curve*. This process is displayed on the module's *Commissioning Screen,* found at the bottom of the *Generator* section of the module's display.

In the example below, the *Droop Curves* have derived that the target frequency and voltage the generators should run at is 50.50 Hz and 237.9 V, based on the load the generators are running at. Each DSE8x10 then regulates their generator's frequency and voltage to match their respective target values. In a correctly commissioned system with a steady load, the actual frequency/voltage would be within ±1 % of the target frequency/voltage. This results in a maximum difference between generators of 2%. The DSE8x10 modules achieve this by adjusting the *Gov* percentage to affect frequency(and intern kWs) and the *AVR* percentage to affect voltage (and intern kvars). Typical magnitudes at no load, with the switchgear closed are as follows:

- No more than 85%

Generator 1

Tgt	50.50	Hz	50.52
Tgt	237.9V	L-N	238.1V
kW	80.0%	kvar	40.0%
Gov	16.0%	Avr	24.0%

Generator 2

Tgt	50.50	Hz	50.52
Tgt	237.9V	L-N	238.1V
kW	80.0%	kvar	40.0%
Gov	16.0%	Avr	24.0%

If the actual frequency/voltage values are not within ±1 % of the target frequency/voltage values, it suggests that the *Gain (P), Stability (I)* and *Derivative (D)* settings need adjusting. Refer to section entitled *Adjusting Gain (P), Stability (I) and Derivative (D)* for further details.

If the kW/kvar percentage does not represent the loading on the generator, repeat the *DSE Four Steps to Successful Synchronising* as it suggests there is an issue with MSC link or wiring of the CTs. Refer to section entitled *DSE Four Steps to Successful Synchronising* for further details.

8.3.2 ADJUSTING GAIN (P), STABILITY (I) AND DERIVATIVE (D)

8.3.2.1 INITIAL SETUP

In most cases the DSE factory settings of 20% for *Gain (P), Stability (I)* and 0 % for *Derivative (D)* are suitable for most systems. This is because the DSE module's control is limited by the *Gain (P), Stability (I)* and *Derivative (D)* settings of the engine's governor / alternator's AVR. Before adjusting the DSE module's settings, adjust the *Gain (P), Stability (I)* and *Derivative (D)* settings of the engine's governor / alternator's AVR in accordance with the manufacturer's recommendations.

8.3.2.2 CALIBRATION

If the loadsharing response of the system is not satisfactory after adjusting the *Gain (P), Stability (I)* and *Derivative (D)* settings of the engine's governor / alternator's AVR, then start to adjust the DSE's settings by:

1. Starting with the *Gain (P), Stability (I)* at 5 % and *Derivative (D)* at 0%. Place the generators in parallel with no load.
2. Gradually increase the *Gain (P)* setting until the generator power production becomes unstable. Very slowly decrease the *Gain (P)* setting, until the power production stabilises. Reduce the setting further by approximately 10 %.
3. Gradually increase the *Stability (I)* setting until the generator power production becomes unstable. Very slowly decrease the *Stability (I)* setting, until the power production stabilises.
4. Apply and remove load to the generators using a loadbank to test response and ensure no oscillation of power between generators. If a load bank is not available repeat the synchronising process several times to see the effect of the changes. Also attempt to 'knock' the governor actuator or change the 'slip frequency' setting to disturb the engine speed and force the controller into making further changes.
5. To improve the load change repose, increase the *Derivative (D)* setting to decrease the overshoot and settling time.

The affect the *Gain (P), Stability (I)* and *Derivative (D)* settings have on the response of a load step being applied to the generator are shown below.

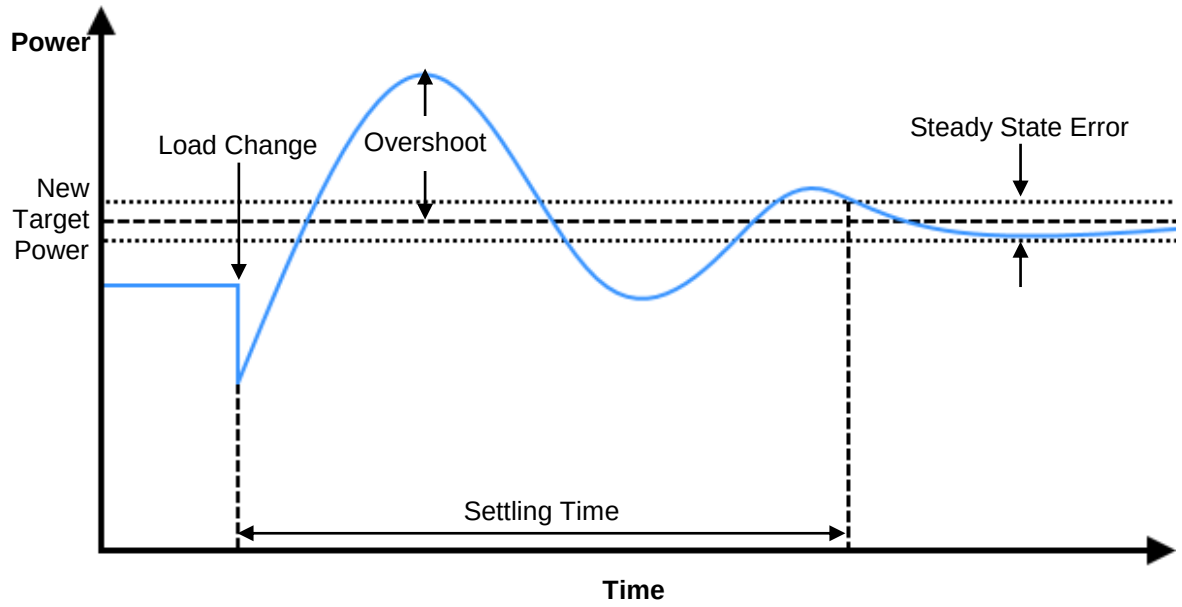

PID Adjustment	Overshoot	Settling Time	Steady State Error
Increase Gain (P)	Increases	Minimal Effect	Decreases
Increase Stability (I)	Increases	Increases	Eliminates
Increase Derivative (D)	Decrease	Decreases	No Effect

8.3.2.3 TROUBLESHOOTING

NOTE: An over damped response results in a slower control process. An under damped response (overshooting the target) leads to an unstable control process.
Either case leads to undesirable consequences such as overcurrent or reverse power, resulting in generator shutdown, and loss of supply to the load.

If the load is oscillating quickly between the generators it suggests that the setting for the *Gain (P)* on the generator(s) is too high or too low. A slow rolling oscillation usually indicates that the *Stability (I)* is too high or too low. These oscillations are caused by incorrect settings on the engine's governor / alternator's AVR and/or the DSE module.

It is possible for the loadsharing stability to change as different generators are go in and out of parallel with one another. Ensure that the *Gain (P), Stability (I)* and *Derivative (D)* are calibrated to give a stable condition when all generators are running in parallel.

9 FAULT FINDING

NOTE: The below fault finding is provided as a guide checklist only. As the module can be configured to provide a wide range of different features, always refer to the source of the module configuration if in doubt.

9.1 STARTING

Symptom	Possible Remedy
Unit is inoperative Read/Write configuration does not operate	Check the battery and wiring to the unit. Check the DC supply. Check the DC fuse.
Unit shuts down	Check DC supply voltage is not above 35 Volts or below 9 Volts Check the operating temperature is not above 70°C. Check the DC fuse.
Fail to Start is activated after pre-set number of attempts to start	Check wiring of fuel solenoid. Check fuel. Check battery supply. Check battery supply is present on the Fuel output of the module. Check the speed-sensing signal is present on the module's inputs. Refer to engine manual.
Continuous starting of generator when in the ***Auto Mode***	Check that there is no signal present on the "Remote Start" input. Check configured polarity is correct.
Generator fails to start on receipt of Remote Start signal.	Check Start Delay timer has timed out. Check signal is on "Remote Start" input. Confirm correct configuration of input is configured to be used as "Remote Start". Check that the oil pressure switch or sensor is indicating low oil pressure to the controller. Depending upon configuration, the set does not start if oil pressure is not low.
Pre-heat inoperative	Check wiring to engine heater plugs. Check battery supply. Check battery supply is present on the Pre-heat output of module. Check pre-heat configuration is correct.
Starter motor inoperative	Check wiring to starter solenoid. Check battery supply. Check battery supply is present on the Starter output of module. Ensure oil pressure switch or sensor is indicating the "low oil pressure" state to the controller.

9.2 LOADING

Symptom	Possible Remedy
Engine runs but generator does not take load	Check Warm up timer has timed out. Ensure generator load inhibit signal is not present on the module inputs. Check connections to the switching device. Note that the set does not take load in ***Manual Mode*** unless there is an active load signal.
Incorrect reading on Engine gauges Fail to stop alarm when engine is at rest	Check engine is operating correctly. Check that sensor is compatible with the module and that the module configuration is suited to the sensor.

9.3 ALARMS

Symptom	Possible Remedy
Oil pressure low fault operates after engine has fired	Check engine oil pressure. Check oil pressure switch/sensor and wiring. Check configured polarity (if applicable) is correct (i.e. Normally Open or Normally Closed) or that sensor is compatible with the module and is correctly configured.
Coolant temp high fault operates after engine has fired.	Check engine temperature. Check switch/sensor and wiring. Check configured polarity (if applicable) is correct (i.e. Normally Open or Normally Closed) or that sensor is compatible with the module.
Shutdown fault operates	Check relevant switch and wiring of fault indicated on LCD display. Check configuration of input.
Electrical Trip fault operates	Check relevant switch and wiring of fault indicated on LCD display. Check configuration of input.
Warning fault operates	Check relevant switch and wiring of fault indicated on LCD display. Check configuration of input.
ECU Amber ECU Red	This indicates a fault condition detected by the engine ECU and transmitted to the DSE controller.
ECU Data Fail	Indicates failure of the CAN data link to the engine ECU. Check all wiring and termination resistors (if required).
Incorrect reading on Engine gauges Fail to stop alarm when engine is at rest	Check engine is operating correctly. Check sensor and wiring paying particular attention to the wiring to terminal 14. Check that sensor is compatible with the module and that the module configuration is suited to the sensor.

9.4 COMMUNICATIONS

Symptom	Possible Remedy
ECU Data Fail	Indicates failure of the CAN data link to the engine ECU. Check all wiring and termination resistors (if required).

9.5 INSTRUMENTS

Symptom	Possible Remedy
Inaccurate generator measurements on controller display	Check that the CT primary, CT secondary and VT ratio settings are correct for the application. Check that the CTs are wired correctly with regards to the direction of current flow (p1,p2 and s1,s2) and additionally ensure that CTs are connected to the correct phase (errors occur if CT1 is connected to phase 2). Remember to consider the power factor (kW = kVA x powerfactor). The controller is true RMS measuring so gives more accurate display when compared with an ‘averaging’ meter such as an analogue panel meter or some lower specified digital multimeters. Accuracy of the controller is better than 1% of full scale. Generator voltage full scale is 415 V ph-N, accuracy is ±4.15 V (1 % of 415 V).

9.6 SYNCHRONISING & LOAD SHARING

Symptom	Possible Remedy
Synchronising not available	Check Synchronising is enabled in the configuration suite software Generator, Synchronising section
Generator does not loadshare correctly	Ensure that all the DSE Four Steps to Synchronising have been completed. Check kW Share & kvar Share are enabled, check generator rating is correctly configured in the DSE configuration suite PC Software and check the MSC link is connected correctly.
Synchronising or load sharing is not operating satisfactorily	Follow the DSE “4 Steps To Synchronising” as detailed in the following section.

9.7 MISCELLANEOUS

Symptom	Possible Remedy
Module appears to ‘revert’ to an earlier configuration	When editing a configuration using the PC software it is vital that the configuration is first ‘read’ from the controller before editing it. This edited configuration must then be “written” back to the controller for the changes to take effect. When editing a configuration using the fascia editor, be sure to press the ***Tick*** ⊘ button to save the change before moving to another item or exiting the fascia editor

10 CAN INTERFACE SPECIFICATION (J1939-75)

`

The ECU port is used for live operational communications between the DSE module and other CAN enabled devices. The specification below details all broadcast messages which are transmitted when the J1939-75 is enabled and the relevant engine file is selected.

Parameter	Description
Protocol	S.A.E. J1939 with PGNs as listed in the following subsections.
Bit Rate	250 kb/s
Isolation	±2.5 kV rms
Termination	120 Ω termination resistor, with the option for switchable resistor by software.

10.1 BROADCAST MESSAGES J1939-75

NOTE: All broadcast CAN messages are priority 3 by default, it is not possible to change the priority of the configurable CAN messages. For further details of module configuration, refer to DSE Publication: 057- 238 DSE8610 MKII Configuration Software Manual.

NOTE: SPNs that are not implemented in the module have all bits set to '1'.

NOTE: *PDU Format* and *PDU Specific* are shown in Hexadecimal.

NOTE: Values larger than 8 bits utilise *Little-Endian* format. For example, a 16-bit value, occupying two Bytes has Byte1 as the most significant Byte and Byte2 as the least significant Byte.

Parameter Groups below are broadcast by the module and are detailed in the following subsections.

10.1.1 ACS - AC SWITCHING DEVICE STATUS

PGN 64913

Priority	Ext Data Page	Data Page	PDU Format	PDU Specific	Size (Bytes)	Rate
3	0	0	FD	91	8	250 ms

SPN Hex	SPN Decimal	Instrument	Byte / Bit	Scaling	Offset	Units
0DD9	3545	Generator Breaker Status - This parameter indicates the measured state of the generator circuit breaker	Byte 1 Bits 1 to 3	***000:*** Open ***001:*** Closed ***010:*** Locked Out ***011-101:*** Available for SAE assignment ***110:*** Error ***111:*** Not available	0	N/A
0DDA	3546	Utility Circuit Breaker Status - This parameter indicates the measured state of the utility circuit breaker.	Byte 1 Bits 4 to 6	***000:*** Open ***001:*** Closed ***010:*** Locked Out ***011-101:*** Available for SAE assignment ***110:*** Error ***111:*** Not available	0	N/A

10.1.2 GC1 - GENERATOR CONTROL 1

PGN 64915

Priority	Ext Data Page	Data Page	PDU Format	PDU Specific	Size (Bytes)	Rate
3	0	0	FD	93	8	100 ms

SPN Hex	SPN Decimal	Instrument	Byte / Bit	Scaling	Offset	Units
0DEF	3567	Generator Control Not In Automatic Start State - This parameter indicates whether or not the generator set is in a condition to automatically start up and provide power. If not, this status parameter is in the ACTIVE state.	Byte 1 Bits 4 to 5	***00:*** Inactive (ready to start automatically) ***01:*** Active (not ready to start automatically) ***10:*** Error ***11:*** Not available	0	N/A

10.1.3 GAAC - GENERATOR AVERAGE BASIC AC QUANTITIES

PGN 65030

Priority	Ext Data Page	Data Page	PDU Format	PDU Specific	Size (Bytes)	Rate
3	0	0	FE	06	8	100 ms

SPN Hex	SPN Decimal	Instrument	Byte / Bit	Scaling	Offset	Units
0988	2440	Generator Avg. L-L AC Voltage	Byte 1 to 2	1	0	V
098C	2444	Generator Avg. L-N AC Voltage	Byte 3 to 4	1	0	V
0984	2626	Generator Avg. AC Frequency	Byte 5 to 6	1/128 Hz/bit	0	Hz
0990	2448	Generator Avg. AC RMS Current	Byte 7 to 8	1	0	A

10.1.4 GPAAC - GENERATOR PHASE A BASIC AC QUANTITIES

PGN 65027

Priority	Ext Data Page	Data Page	PDU Format	PDU Specific	Size (Bytes)	Rate
3	0	0	FE	03	8	100 ms

SPN Hex	SPN Decimal	Instrument	Byte / Bit	Scaling	Offset	Units
0985	2627	Generator Phase A AC Frequency	Byte 5 to 6	128	0	V
0989	2441	Generator Phase A Line Line AC RMS Voltage	Byte 1 to 2	1	0	V
098D	2445	Generator Phase A Line Neutral AC RMS Voltage	Byte 3 to 4	1	0	A
0991	2449	Generator Phase A AC RMS Current	Byte 7 to 8	1	0	Hz

10.1.5 GPAACP - GENERATOR PHASE A AC POWER

PGN 65026

Priority	Ext Data Page	Data Page	PDU Format	PDU Specific	Size (Bytes)	Rate
3	0	0	FE	02	8	100 ms

SPN Hex	SPN Decimal	Instrument	Byte / Bit	Scaling	Offset	Units
0993	2453	Generator Phase A Real Power	Byte 1 to 4	1	$-2*10^9$	W
099D	2461	Generator Phase A Apparent Power	Byte 5 to 8	1	$-2*10^9$	W

10.1.6 GPAACR - GENERATOR PHASE A AC REACTIVE POWER

PGN 65025

Priority	Ext Data Page	Data Page	PDU Format	PDU Specific	Size (Bytes)	Rate
3	0	0	FE	00	8	100 ms

SPN Hex	SPN Decimal	Instrument	Byte / Bit	Scaling	Offset	Units
0999	2457	Generator Phase A Reactive Power	Byte 1 to 4	1	$-2*10^9$	var

10.1.7 GPBAC - GENERATOR PHASE B BASIC AC QUANTITIES

PGN 65024

Priority	Ext Data Page	Data Page	PDU Format	PDU Specific	Size (Bytes)	Rate
3	0	0	FE	00	8	100 ms

SPN Hex	SPN Decimal	Instrument	Byte / Bit	Scaling	Offset	Units
0986	2628	Generator Phase B AC Frequency	Byte 5 to 6	0.0078125	0	Hz
098A	2442	Generator Phase B Line Line AC RMS Voltage	Byte 1 to 2	1	0	V
098E	2446	Generator Phase B Line Neutral AC RMS Voltage	Byte 3 to 4	1	0	V
0992	2450	Generator Phase B AC RMS Current	Byte 7 to 8	1	0	A

10.1.8 GPBACP - GENERATOR PHASE B AC POWER

PGN 65023

Priority	Ext Data Page	Data Page	PDU Format	PDU Specific	Size (Bytes)	Rate
3	0	0	FD	FF	8	100 ms

SPN Hex	SPN Decimal	Instrument	Byte / Bit	Scaling	Offset	Units
0996	2454	Generator Phase B Real Power	Byte 1 to 4	1	$-2*10^9$	W
099E	2462	Generator Phase B Apparent Power	Byte 5 to 8	1	$-2*10^9$	W

10.1.9 GPBACR - GENERATOR PHASE B AC REACTIVE POWER

PGN 65022

Priority	Ext Data Page	Data Page	PDU Format	PDU Specific	Size (Bytes)	Rate
3	0	0	FD	FE	8	100 ms

SPN Hex	SPN Decimal	Instrument	Byte / Bit	Scaling	Offset	Units
099A	2458	Generator Phase B Reactive Power	Byte 1 to 4	1	$-2*10^9$	var

10.1.10 GPCAC - GENERATOR PHASE C BASIC AC QUANTITIES

PGN 65021

Priority	Ext Data Page	Data Page	PDU Format	PDU Specific	Size (Bytes)	Rate
3	0	0	FD	FD	8	100 ms

SPN Hex	SPN Decimal	Instrument	Byte / Bit	Scaling	Offset	Units
0987	2629	Generator Phase C AC Frequency	Byte 5 to 6	0.0078125	0	Hz
098B	2443	Generator Phase C Line Line AC RMS Voltage	Byte 1 to 2	1	0	V
098F	2447	Generator Phase C Line Neutral AC RMS Voltage	Byte 3 to 4	1	0	V
0993	2451	Generator Phase C AC RMS Current	Byte 7 to 8	1	0	A

10.1.11 GPCACP - GENERATOR PHASE C AC POWER

PGN65020

Priority	Ext Data Page	Data Page	PDU Format	PDU Specific	Size (Bytes)	Rate
3	0	0	FD	FF	8	100 ms

SPN Hex	SPN Decimal	Instrument	Byte / Bit	Scaling	Offset	Units
0997	2455	Generator Phase C Real Power	Byte 1 to 4	1	$-2*10^9$	W
099F	2463	Generator Phase C Apparent Power	Byte 5 to 8	1	$-2*10^9$	W

10.1.12 GPCACR - GENERATOR PHASE C AC REACTIVE POWER

PGN 65019

Priority	Ext Data Page	Data Page	PDU Format	PDU Specific	Size (Bytes)	Rate
3	0	0	FD	FB	8	100 ms

SPN Hex	SPN Decimal	Instrument	Byte / Bit	Scaling	Offset	Units
099B	2459	Generator Phase C Reactive Power	Byte 1 to 4	1	$-2*10^9$	var

10.1.13 GTACPP - GENERATOR TOTAL AC PERCENT POWER

PGN 64911

Priority	Ext Data Page	Data Page	PDU Format	PDU Specific	Size (Bytes)	Rate
3	0	0	FD	8F	8	250 ms

SPN Hex	SPN Decimal	Instrument	Byte / Bit	Scaling	Offset	Units
0E06	3590	Generator Total Percent kW as a percentage of rated power	Byte 1 to 2	0.0078125	-251	%

10.1.14 GTACE - GENERATOR TOTAL KW HOURS EXPORT

PGN 65018

Priority	Ext Data Page	Data Page	PDU Format	PDU Specific	Size (Bytes)	Rate
3	0	0	FD	FA	8	100 ms

SPN Hex	SPN Decimal	Instrument	Byte / Bit	Scaling	Offset	Units
09A4	2468	Generator Total kW Hours Export	Byte 1 to 4	1	0	kWh

10.1.15 GTACER - GENERATOR TOTAL AC REACTIVE ENERGY

PGN64910

Priority	Ext Data Page	Data Page	PDU Format	PDU Specific	Size (Bytes)	Rate
3	0	0	FD	8E	8	250 ms

SPN Hex	SPN Decimal	Instrument	Byte / Bit	Scaling	Offset	Units
0E09	3593	Generator Total kVAr Hours Export	Byte 1 to 4	1	0	kvarh

10.1.16 GTACP - GENERATOR TOTAL AC POWER

PGN65029

Priority	Ext Data Page	Data Page	PDU Format	PDU Specific	Size (Bytes)	Rate
3	0	0	FE	05	8	100 ms

SPN Hex	SPN Decimal	Instrument	Byte / Bit	Scaling	Offset	Units
0994	2452	Generator Total Real Power	Byte 1 to 4	1	$-2*10^9$	W
099C	2460	Generator Total Apparent Power	Byte 5 to 8	1	$-2*10^9$	VA

10.1.17 GTACR - GENERATOR TOTAL AC REACTIVE POWER

PGN65028

Priority	Ext Data Page	Data Page	PDU Format	PDU Specific	Size (Bytes)	Rate
3	0	0	FE	04	8	100 ms

SPN Hex	SPN Decimal	Instrument	Byte / Bit	Scaling	Offset	Units
0988	2456	Generator Total Reactive Power	Byte 1 to 4	1	$-2*10^9$	var
09A0	2464	Generator Overall Power Factor	Byte 5 to 6	-1	$6.103515625*10^{-5}$	pF
09D6	2518	Generator Overall Power Factor Lagging	Byte 7 to 8	1	0	+/-

10.2 BROADCAST MESSAGES ENGINE INSTRUMENTATION

NOTE: The availability of the Engine Instrumentation PGNs are dependent upon the engine file selected within the DSE module's configuration. Contact DSE technical support: support@deepseaelectronics.com for more information.

10.2.1 DD - DASH DISPLAY

PGN 65276

Priority	Ext Data Page	Data Page	PDU Format	PDU Specific	Size (Bytes)	Rate
3	0	0	FE	FC	8	1000 ms

SPN Hex	SPN Decimal	Instrument	Byte / Bit	Scaling	Offset	Units
060	96	Ratio of volume of fuel to the total volume of fuel storage container.	Byte 2	0.4	0	%

10.2.2 EC2 - ENGINE CONFIGURATION 2

PGN64895

Priority	Ext Data Page	Data Page	PDU Format	PDU Specific	Size (Bytes)	Rate
3	0	0	FD	7F	8	Request

SPN Hex	SPN Decimal	Instrument	Byte / Bit	Scaling	Offset	Units
0E56	3670	Maximum Crank Attempts per Start Attempt	Byte 1	1	0	N/A

10.2.3 EEC1- ENGINE SPEED

PGN61444

Priority	Ext Data Page	Data Page	PDU Format	PDU Specific	Size (Bytes)	Rate
3	0	0	F0	04	8	100 ms

SPN Hex	SPN Decimal	Instrument	Byte / Bit	Scaling	Offset	Units
0BE	190	Engine Speed	Byte 4 to 5	0.125	0	RPM

10.2.4 EEC4 - CRANK ATTEMPT COUNT ON PRESENT START ATTEMPT

PGN65214

Priority	Ext Data Page	Data Page	PDU Format	PDU Specific	Size (Bytes)	Rate
3	0	0	FE	FB	8	Request

SPN Hex	SPN Decimal	Instrument	Byte / Bit	Scaling	Offset	Units
0E57	3671	Crank Attempt Count on Present Start Attempt	Byte 6	1	0	N/A

10.2.5 EFL_P1 - OIL PRESSURE

PGN65263

Priority	Ext Data Page	Data Page	PDU Format	PDU Specific	Size (Bytes)	Rate
3	0	0	FE	EF	8	500 ms

SPN Hex	SPN Decimal	Instrument	Byte / Bit	Scaling	Offset	Units
064	100	Oil Pressure	Byte 4	4	0	kPa

10.2.6 EOI - EMERGENCY STOP

PGN64914

Priority	Ext Data Page	Data Page	PDU Format	PDU Specific	Size (Bytes)	Rate
3	0	0	FD	92	8	250 ms

SPN Hex	SPN Decimal	Instrument	Byte / Bit	Scaling	Offset	Units
0E17	3607	Emergency Stop ***00:*** Off (No Shutdown Requested) ***01:*** On (Shutdown Requested) ***10:*** Reserved ***11:*** Don't care / take no action	Byte 6 Bit 6 to 8	1	0	N/A

10.2.7 ET1 - COOLANT TEMPERATURE

PGN65262

Priority	Ext Data Page	Data Page	PDU Format	PDU Specific	Size (Bytes)	Rate
3	0	0	FE	EE	8	1000 ms

SPN Hex	SPN Decimal	Instrument	Byte / Bit	Scaling	Offset	Units
06E	110	Engine Coolant Temperature	Byte 1	1	-40	°C

10.2.8 HOURS - ENGINE HOURS REVOLUTIONS

PGN65253

Priority	Ext Data Page	Data Page	PDU Format	PDU Specific	Size (Bytes)	Rate
3	0	0	FE	E5	8	Request

SPN Hex	SPN Decimal	Instrument	Byte / Bit	Scaling	Offset	Units
0F7	247	Engine Total Hours of Operation	Byte 1 to 4	0.05	0	hr

10.2.9 VEP1 - VEHICLE ELECTRICAL POWER

PGN65271

Priority	Ext Data Page	Data Page	PDU Format	PDU Specific	Size (Bytes)	Rate
3	0	0	FE	F7	8	1000 ms

SPN Hex	SPN Decimal	Instrument	Byte / Bit	Scaling	Offset	Units
0A7	167	Charge Alternator Voltage	Byte 3 to 4	0.05	0	V
0A8	168	Plant Battery Voltage	Byte 5 to 6	0.05	0	V

10.2.10 DM01 - CONDITIONS ACTIVE DIAGNOSTIC TROUBLE CODES

NOTE: The availability of the Engine Alarm SPN and FMI is dependent upon the engine file selected within the DSE module's configuration. Contact DSE technical support: support@deepseaelectronics.com for more information.

NOTE: If only one DM1 alarm is active the DM1 priority will remain as six. If two or more DM1 alarms are active the priority will be seven.

PGN65226

Priority	Ext Data Page	Data Page	PDU Format	PDU Specific	Size (Bytes)	Rate
6/7	0	0	FE	CA	8	1000 ms

SPN Hex	SPN Decimal	Instrument	Byte / Bit	Scaling	Offset	Units
04BE	1214	Suspect Parameter Number	Byte 3 Bits 1 to 19	1	0	N/A
04BF	1215	Failure Mode Identifier	Byte 5 Bits 1 to 5	1	0	N/A
06AA	1706	SPN Conversion Method	Byte 6 Bit 7	1	0	N/A

DM1 Conditions

Key	Value
Low Fault - Least Severe	17
High Fault - Least Severe	15
Low Fault - Most Severe	1
High Fault - Most Severe	0
Erratic - Incorrect Data	2

Generator Alarm Condition	SPN	Warning FMI	Shutdown FMI
Generator Average AC Frequency Under	2626	17	1
SPN Generator Average Line-Line AC RMS Voltage Over	2626	15	0
Generator Average Line-Line AC RMS Voltage Under	2440	17	1
Generator Average Line-Line AC RMS Voltage Over	2440	15	0
Generator Average Line-Neutral AC RMS Voltage Under	2444	17	1
Generator Average Line-Neutral AC RMS Voltage Over	2444	15	0
Generator Average AC RMS Current Over	2448	15	0

Parameters continued overleaf…

Engine Alarm Condition	SPN	Warning FMI	Shutdown FMI
Fuel Level Low	96	17	1
Oil Pressure Low (Analogue Sensor)	100	17	1
Oil Pressure Low (Digital Input)	100	17	1
Oil Pressure Sensor Fault	100	2	2
Coolant Temperature High (Analogue Sensor)	110	15	0
Coolant Temperature High (Digital Input)	110	15	0
Coolant Temperature Sensor Fault	110	2	2
Charge Alternator Failed	167	17	1
Plant Battery Voltage High	168	15	0
Plant Battery Voltage Low	168	17	1
Overspeed	190	15	0
Underspeed	190	17	1

11 MAINTENANCE, SPARES, REPAIR AND SERVICING

The controller is *Fit and Forget*. As such, there are no user serviceable parts within the controller. In the case of malfunction, you should contact your original equipment manufacturer (OEM).

11.1 PURCHASING ADDITIONAL CONNECTOR PLUGS FROM DSE

If additional plugs are required, contact our Sales department using the part numbers below.

11.1.1 PACK OF PLUGS

Module Type	Plug Pack Part Number
DSE8610 MKII	007-891

11.1.2 INDIVIDUAL PLUGS

Module Terminal Designation	Plug Description	Part No.
1 to 14 	14-way 5.08 mm	007-428
15 to 22  **CAN**	8-way 5.08 mm	007-164
23 to 39  **ECU**  **MSC GOV AVR**	17-way 5.08 mm	007-452
40 to 47 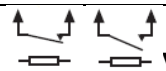 **V1**	8-way 7.62 mm	007-454
48 to 51 **V2**	4-way 7.62 mm	007-171
52 to 58 	7-way 5.08 mm	007-447
59 to 70 	12-way 5.08 mm	007-109
71 to 76 **RS485 Port 1 Port 2**	6-way 5.08 mm	007-446
	PC Configuration interface lead (USB type A – USB type B)	016-125

11.2 PURCHASING ADDITIONAL FIXING CLIPS FROM DSE

Item	Description	Part No.
	Module Fixing Clips (Packet of 4)	020-294

11.3 PURCHASING ADDITIONAL SEALING GASKET FROM DSE

Item	Description	Part No.
	Module Silicon Sealing Gasket	020-564

11.4 PURCHASING REAR MOUNT PANEL BRACKET FROM DSE

Item	Description	Part No.
	Rear Mount Panel Bracket	020-1044

11.5 DSENET® EXPANSION MODULES

NOTE: A maximum of twenty (20) expansion modules can be connected to the DSE8610 MKII DSENet® Port

NOTE: DSENet® utilises an RS485 connection. Using Belden 9841 (or equivalent) cable allows for the expansion cable to be extended to a maximum of 1.2 km.
DSE Stock and supply Belden 9841 cable. DSE Part Number 016-030.

Item	Max No. Supported	Description	DSE Part Numbers		
			Model Order Number	Operator Manual	Installation Instructions
	4	Model DSE2130 input module provides additional analogue and digital inputs for use with the controller.	2130-00	055-060	057-082
	4	Model DSE2131 Ratio-metric input expansion module provides additional restive, digital, 0 V to 10 V and 4 mA to 20 mA inputs for use with the controller.	2131-00	055-115	057139
	4	Model DSE2133 RTD/Thermocouple input expansion module provides additional RTD and thermocouple inputs for use with the controller.	2133-00	055-114	057-140
	4	Model DSE2152 Ratio-metric output expansion module provides additional 0 V to 10 V and 4 mA to 20 mA outputs for use with the controller.	2152-00	055-112	057-141
	10	Model DSE2157 expansion relay module provides eight additional voltage free relays for use with the controller	2157-00	055-061	057-083
	10	Model DSE2548 expansion LED module provides additional LED indications, internal sounder and remote lamp test/alarm mute for use with the controller.	2548-00	057-084	053-032
	4	DSE Intelligent Battery Charger monitored by the controller	Various DSE Intelligent Battery Chargers are supported, contact DSE Technical Support; support@deepseaelectronics.com for further details.		

12 WARRANTY

DSE Provides limited warranty to the equipment purchaser at the point of sale. For full details of any applicable warranty, refer to the original equipment supplier (OEM)

13 DISPOSAL

13.1 WEEE (WASTE ELECTRICAL AND ELECTRONIC EQUIPMENT)

If you use electrical and electronic equipment you must store, collect, treat, recycle and dispose of WEEE separately from your other waste



This Page is Intentionally Blank